COMMERCIAL PARTS LIST

BALLOON NO	DESCRIPTION	QTY/ ASSY
1	NUT, SELF-LOCKING , PLATE -TWO LUG, FLOATING, VARIABLE COUNTERBORE, REPLACEABLE NUT ELEMENT, CRES, A286, UNPLATED, NAS1791C6-1NW.	56

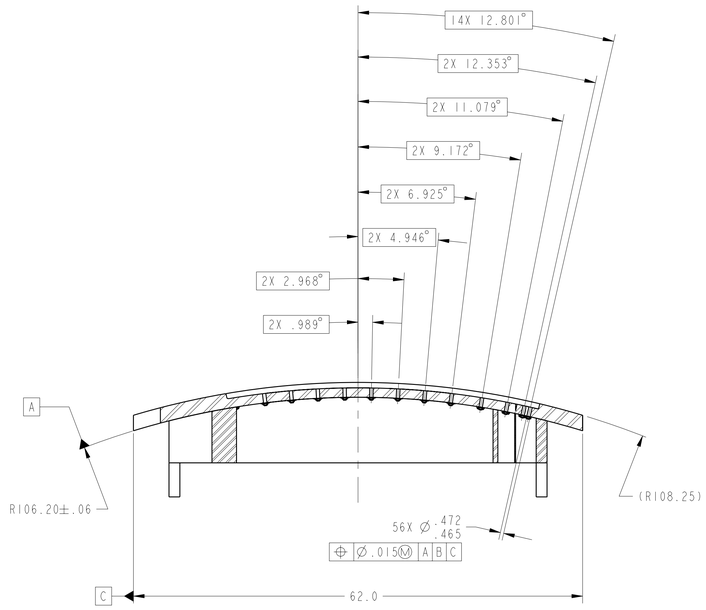

A-A

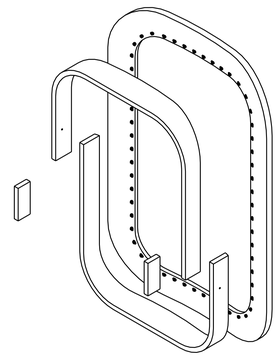

SCALE: 1/16

1. MATERIAL: ASTM A516, GRADE 70, NORMALIZED OR NON-NORMALIZED AND TESTED IN ACCORDANCE WITH THE TECHNICAL REQUIREMENTS OF THE PURCHASE ORDER. A CERTIFIED MATERIALS TEST REPORT (CMTR) IS REQUIRED.
2. 125 Ra ALL MACHINED SURFACES.
3. ALL WELD JOINTS SHALL BE CLASSIFIED AS CLASS A AND SUBJECTED TO VISUAL WELD EXAMINATION AND CORRESPONDING WELD CLASS NONDESTRUCTIVE TESTING (NDT) REQUIREMENTS IN ACCORDANCE WITH GRC-ARES-1-X REQ-061 AEROSPACE WELDING REQUIREMENTS.
4. ALL WELDING SHALL BE PERFORMED USING A QUALIFIED PROCEDURE IN ACCORDANCE WITH GRC-ARES-1-X-REQ-061.
5. ALL WELD MATERIAL SHALL BE IN ACCORDANCE WITH EITHER E71T-1M/E71T-12M (DUAL CERTIFIED) OR ER70S-2, AS SUPPLIED BY THE GOVERNMENT.
6. UTILIZE WELD ACCEPTANCE CRITERIA FOR THE SPECIFIC NDT METHOD IN ACCORDANCE WITH GRC-ARES-1-X-REQ-061.
7. A RECORD OF THE WELD DISCONTINUITIES SHOWING THEIR SIZE AND ORIENTATION FOR THE SKIN-TO-FLANGE WELDS SHALL BE DOCUMENTED FOR AN EVALUATION OF THE WELDING PROCESS.
8. METAL STAMP PART NUMBER 060213MFA103, ON SPECIFIED SURFACE, PER SAE -AS478, METHOD 2A2 (ZONE E3).

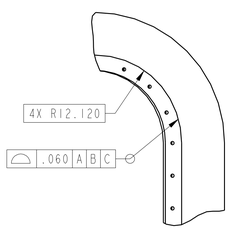

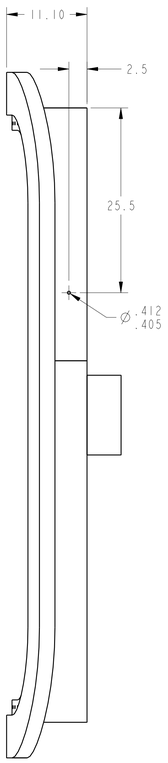

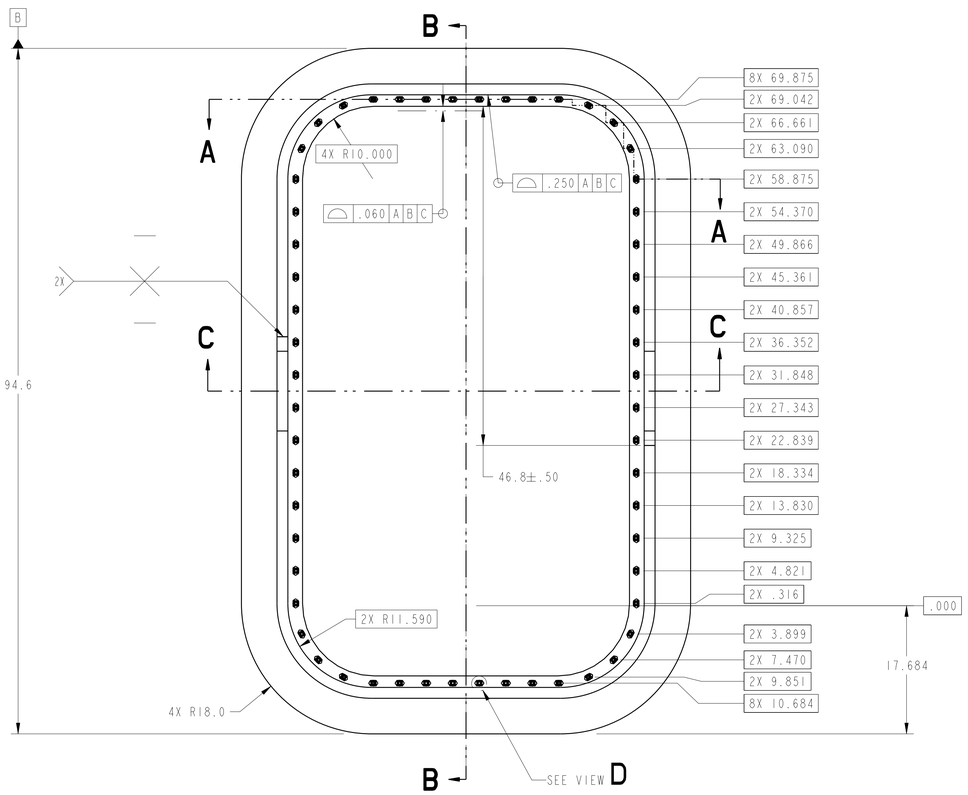

B-B

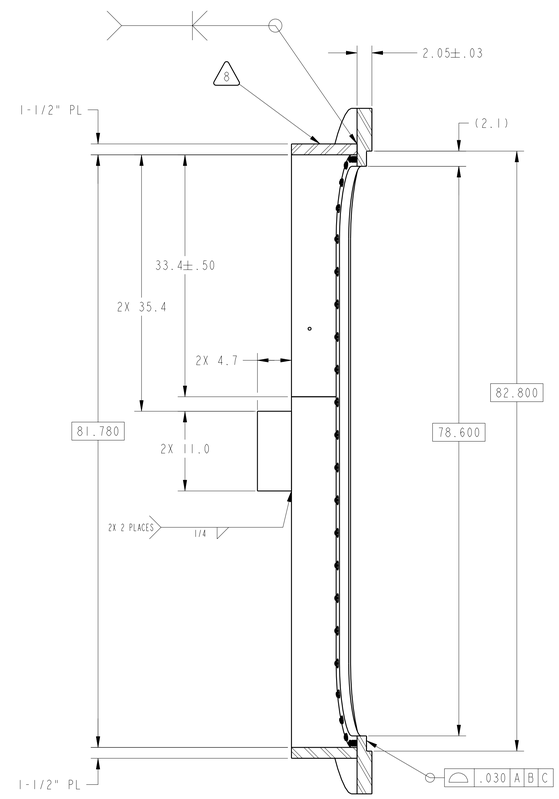

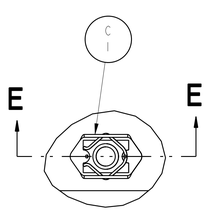

DETAIL D
SCALE 1/1

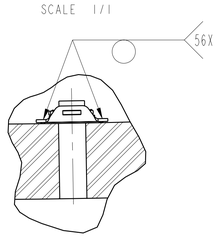

SECTION E-E

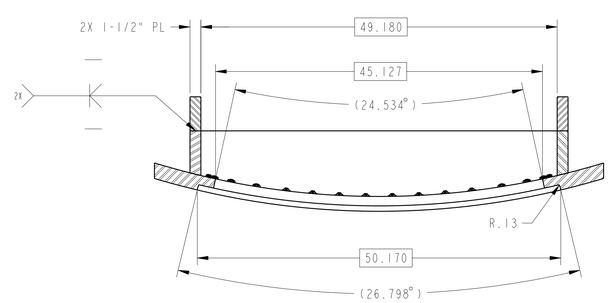

C-C

Distributed by AIX USS CMO on 11/21/07
For Procurement Use Only

PRIOR TO USE VERIFY THE INTENDED PURPOSE IN PDM ("FOR" ATTRIBUTE)			
UNLESS OTHERWISE SPECIFIED DIMENSIONS ARE IN INCHES	CONTRACT / CONTRACTOR ASRC AEROSPACE		
TOLERANCE ON		TASK ORDER	
.X	± 0.03	DRAFTER	ASRC/ M. AYNIK
.XX	± 0.02	ENGINEER	DES/ J. RAMSEY
.XXX	±	DESIGNER	ASRC/ M. AYNIK
FRACTION	± -	DIMENSIONING AND TOLERANCING PER ASME Y14.5M-1994	
ANGULAR	± 0.50°		
BREAK EDGES	.02-.03		
PDM REL LEVEL: Design	PDM REVISION: -		
PDM DATABASE:			
MODEL NAME: 060213MFA103_ROCS_DOUBLER_WELD			
CHECK FOR ANY OUTSTANDING ECO'S PRIOR TO USE			

CHG	ZONE	DESCRIPTION	APP/DATE
REVISIONS			

NATIONAL AERONAUTICS AND SPACE ADMINISTRATION
JOHN H. GLENN RESEARCH CENTER
LEWIS FIELD
CLEVELAND, OHIO

IS-1 (WELDMENT)

060213MFA101

A103 ROCS DOUBLER WELDMENT

SIZE	DRAWING NUMBER	REV	BLDG	AREA
E	060213MFA103	-	50	HI BAY
SCALE: 1/8 AND NOTED	INITIAL REL DATE XX/XX/2007	SHEET 1 OF 1	UNITS: INCH	DISCIPLINE MECHANICAL

PRO/E VERSION: Wildfire 2.0

SIZE E DRAWING NUMBER 060213MFA103 REV -

NAME:AYNIK OBJECT:060213MFA103_ROCS_DOUBLER_WELD DATE:21-Nov-07 09:00:37