COMMERCIAL PARTS LIST

BALLOON NO	DESCRIPTION	QTY/ ASSY
1	1.000-12UNF-2A X 2.50 LONG, GR. 8 HEX HEAD BOLT.	4
2	1.000-12UNF-2B HEX NUT, GR. 8 (UNCOATED AND UNPLATED) FOR WELD PURPOSES.	4

1. MATERIAL: ASTM A36, RECTANGULAR STEEL TUBE,(4.0 X 8.0 NOMINAL SIZE X 1/2 WALL). CERTIFICATE OF CONFORMANCE REQUIRED.
2. MATERIAL: ASTM A36 3/4 STEEL PLATE. CERTIFICATE OF CONFORMANCE REQUIRED.
3. MATERIAL: ASTM A36 3/8 STEEL PLATE. CERTIFICATE OF CONFORMANCE REQUIRED.
4. CUT HOLE IN 3/4 PLATE TO MATCH CONTOUR OF RECTANGULAR TUBE, 2 PLACES.
5. METAL STAMP DRAWING PART NUMBER 060213MFA104, ON SPECIFIED SURFACE. IF QUANTITY GREATER THAN ONE ADD SERIAL NUMBER -01 TO -XX, PER SAE- AS478, METHOD 2A2 (ZONE B6).

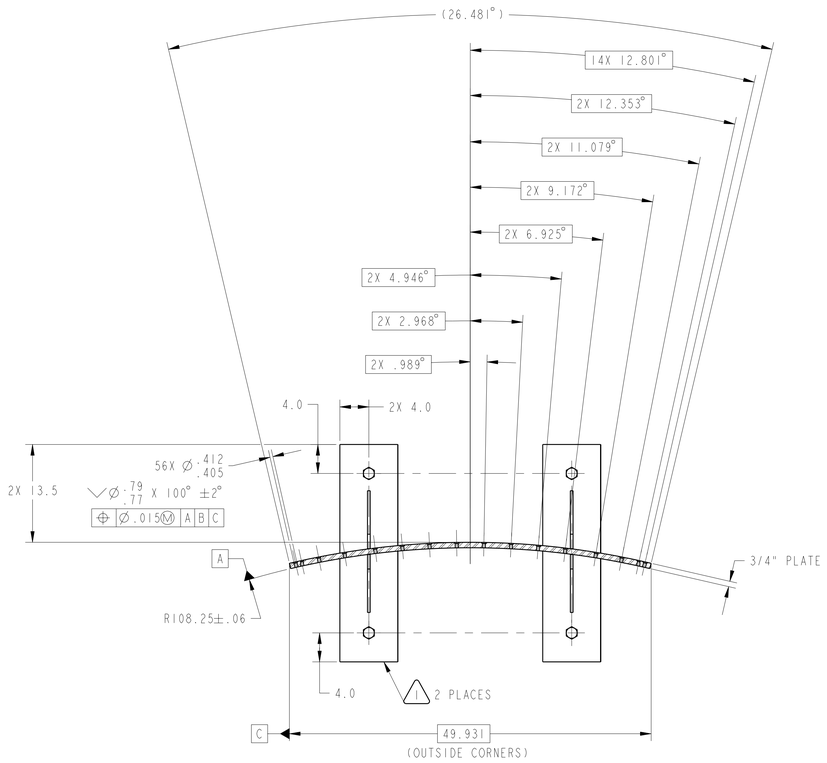

A-A

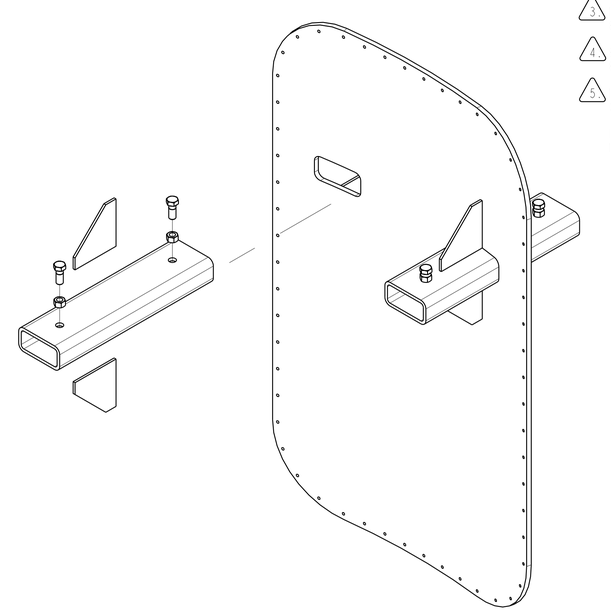

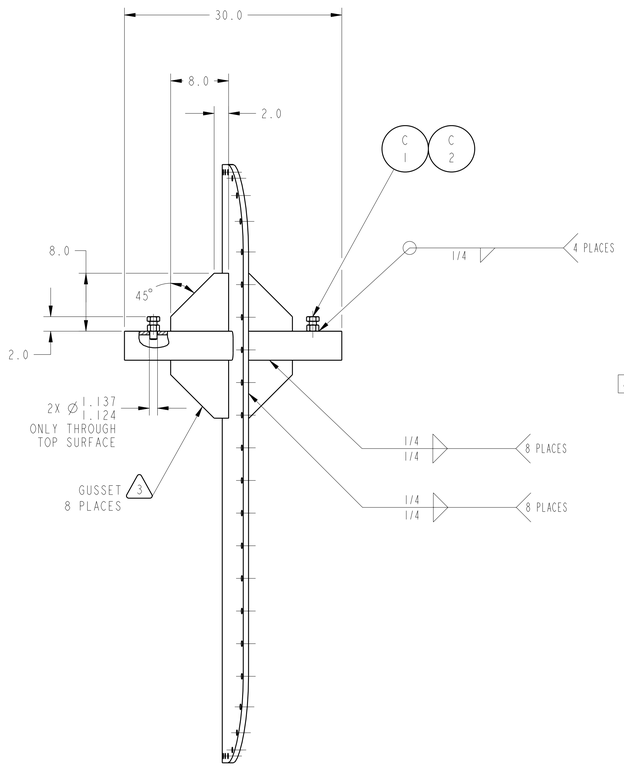

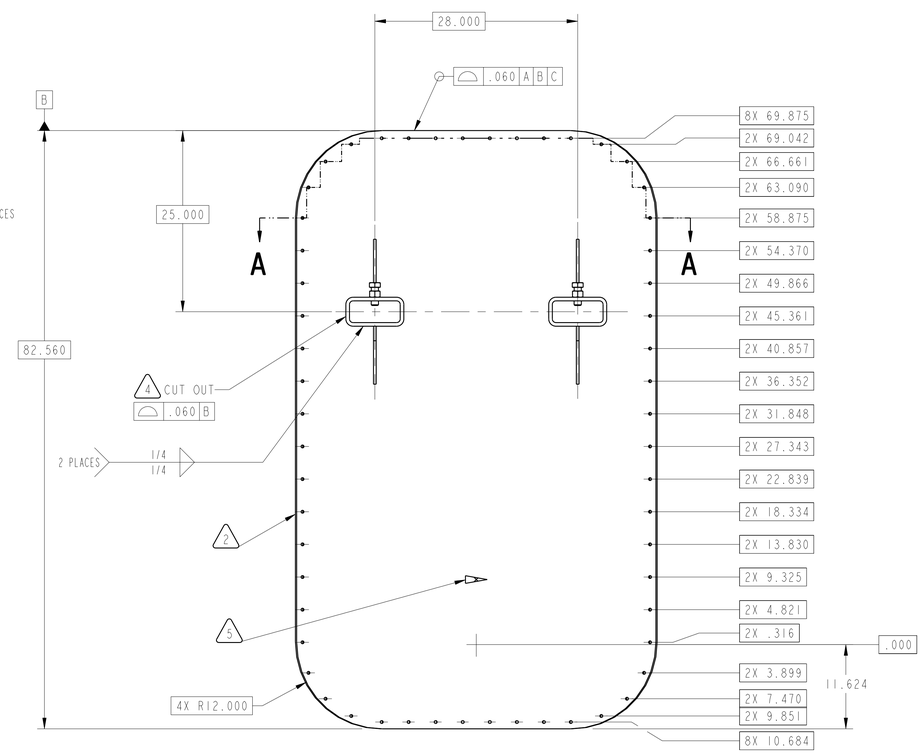

Distributed by AIX USS CMO on 11/21/07
For Procurement Use Only

CHG	ZONE	DESCRIPTION	APP/DATE

REVISIONS

PRIOR TO USE VERIFY THE INTENDED PURPOSE IN PDM ("FOR" ATTRIBUTE)

UNLESS OTHERWISE SPECIFIED DIMENSIONS ARE IN INCHES

CONTRACT
CONTRACTOR ASRC AEROSPACE
TASK ORDER

TOLERANCE ON			
.X	± 0.03	DRAFTER	ASRC/ M.AYNIK
.XX	± 0.02	ENGINEER	DES/ J. RAMSEY
.XXX	±	DESIGNER	ASRC/ M.AYNIK
FRACTION	± -	DIMENSIONING AND TOLERANCING PER ASME Y14.5M-1994	
ANGULAR	± 0.50°		
BREAK EDGES	.02-.03		

NATIONAL AERONAUTICS AND SPACE ADMINISTRATION
JOHN H. GLENN RESEARCH CENTER
LEWIS FIELD
CLEVELAND, OHIO

IS-1 (WELDMENT)
060213MFA101

A104 ROCS GSE LIFT PLATE WELDMENT

PDM REL LEVEL: Design PDM REVISION: -
PDM DATABASE:
MODEL NAME: 060213MFA104_LIFT_FIX_ROCS_DOUB
CHECK FOR ANY OUTSTANDING ECO'S PRIOR TO USE

SIZE	DRAWING NUMBER	REV	BLDG	AREA
E	060213MFA104	-	50	HI BAY

UNITS: INCH

SCALE:	INITIAL REL DATE	SHEET	DISCIPLINE
1/8	XX/XX/2007	1 OF 1	MECHANICAL

PRO/E VERSION: Wildfire 2.0

SIZE E DRAWING NUMBER 060213MFA104 REV -

NAMEMANNK OBRECT060213MFA104_LIFT_FIX_ROCS_DOUB DATE31-Mar-07 0909942