COMMERCIAL PARTS LIST

BALLOON NO	DESCRIPTION	QTY/ ASSY
1	NUT, SELF-LOCKING , PLATE -TWO LUG, FLOATING, VARIABLE COUNTERBORE, REPLACEABLE NUT ELEMENT, CRES, A286, UNPLATED, NAS1791C6-1NW.	40

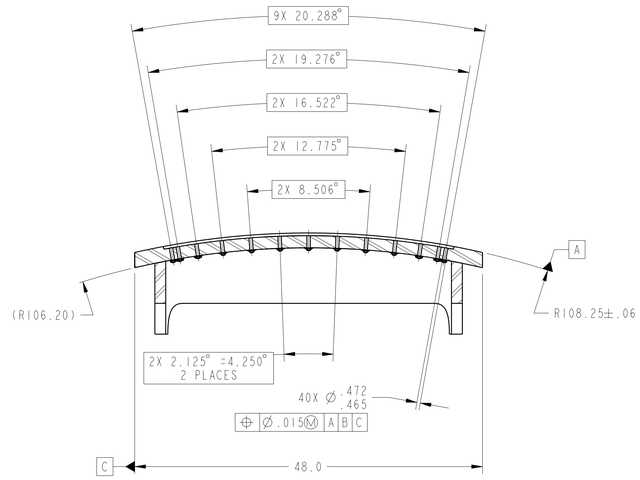

A-A

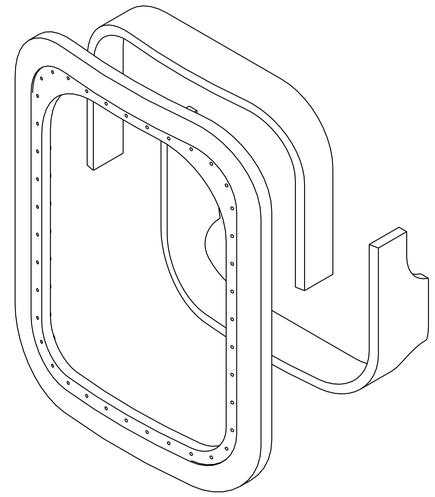

1. MATERIAL: ASTM A516, GRADE 70, NORMALIZED OR NON-NORMALIZED AND TESTED IN ACCORDANCE WITH THE TECHNICAL REQUIREMENTS OF THE PURCHASE ORDER. A CERTIFIED MATERIALS TEST REPORT (CMTR) IS REQUIRED.
2. 125 Ra ALL MACHINED SURFACES.
3. ALL WELD JOINTS SHALL BE CLASSIFIED AS CLASS A AND SUBJECTED TO VISUAL WELD EXAMINATION AND CORRESPONDING WELD CLASS NONDESTRUCTIVE TESTING (NDT) REQUIREMENTS IN ACCORDANCE WITH GRC-ARES-1-X REQ-061 AEROSPACE WELDING REQUIREMENTS.
4. ALL WELDING SHALL BE PERFORMED USING A QUALIFIED PROCEDURE IN ACCORDANCE WITH GRC-ARES-1-X-REQ-061.
5. ALL WELD MATERIAL SHALL BE IN ACCORDANCE WITH EITHER E71T-1M/E71T-12M (DUAL CERTIFIED) OR ER70S-2, AS SUPPLIED BY THE GOVERNMENT.
6. UTILIZE WELD ACCEPTANCE CRITERIA FOR THE SPECIFIC NDT METHOD IN ACCORDANCE WITH GRC-ARES-1-X-REQ-061.
7. A RECORD OF THE WELD DISCONTINUITIES SHOWING THEIR SIZE AND ORIENTATION FOR THE SKIN-TO-FLANGE WELDS SHALL BE DOCUMENTED FOR AN EVALUATION OF THE WELDING PROCESS.
8. METAL STAMP PART NUMBER 060213MFA105, ON SPECIFIED SURFACE, PER SAE -AS478, METHOD 2A2 (ZONE E3).

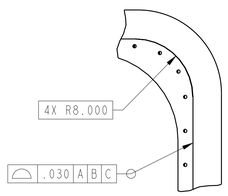

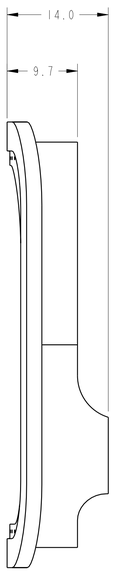

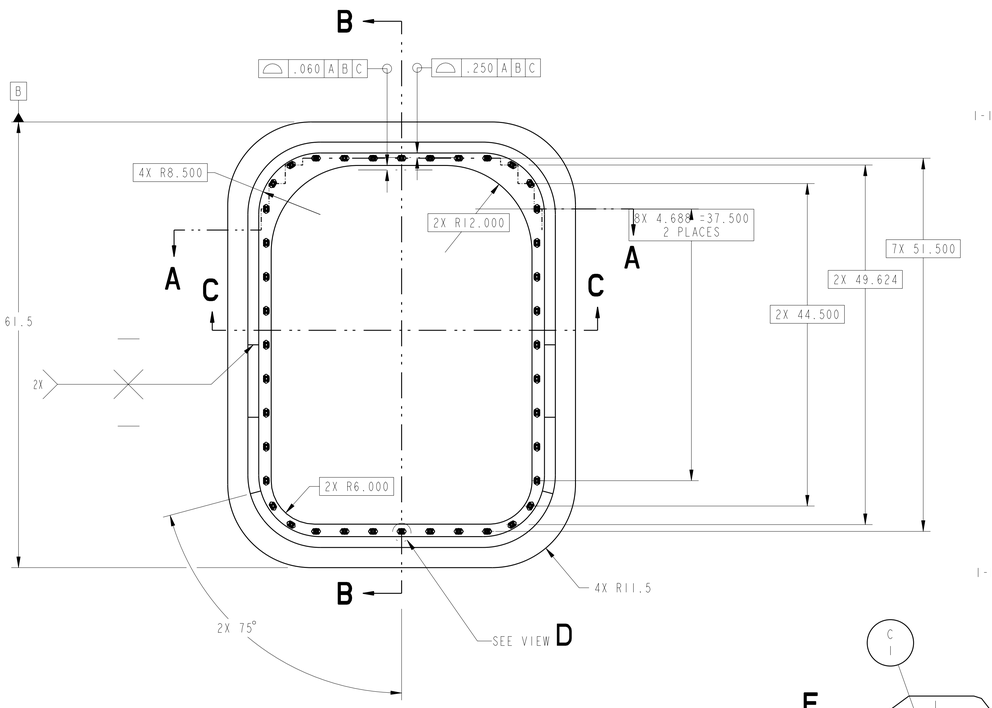

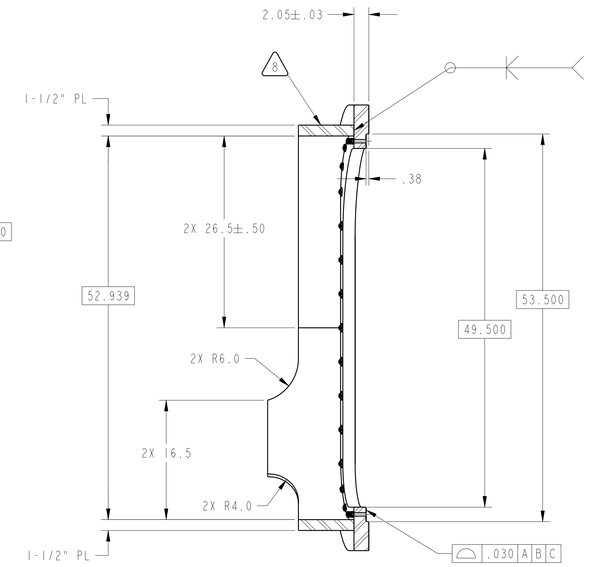

B-B

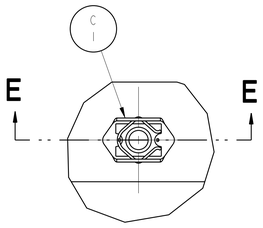

DETAIL D
SCALE 1/1

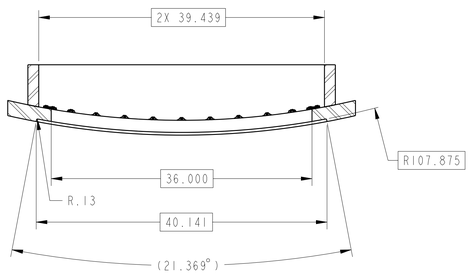

C-C

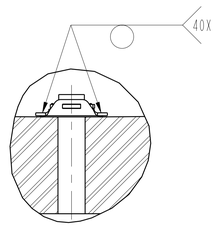

E-E

Distributed by AIX USS CMO on 11/21/07
For Procurement Use Only

CHG	ZONE	DESCRIPTION	APP/DATE

PRIOR TO USE VERIFY THE INTENDED PURPOSE IN PDM ("FOR" ATTRIBUTE)

REVISIONS

UNLESS OTHERWISE SPECIFIED DIMENSIONS ARE IN INCHES

TOLERANCE ON

.X	± 0.03
.XX	± 0.02
.XXX	±
FRACTION	± -
ANGULAR	± 0.50°
BREAK EDGES	.02-.03

CONTRACT
CONTRACTOR ASRC AEROSPACE
TASK ORDER
DRAFTER ASRC/ M. AYNIK
ENGINEER DES/ J. RAMSEY
DESIGNER ASRC/ M. AYNIK

DIMENSIONING AND TOLERANCING PER ASME Y14.5M-1994

NATIONAL AERONAUTICS AND SPACE ADMINISTRATION
JOHN H. GLENN RESEARCH CENTER
LEWIS FIELD
CLEVELAND, OHIO

IS-1 (WELDMENT)

060213MFA101

A105 ACCESS HATCH DOUBLER WELDMENT

PDM REL LEVEL: Design PDM REVISION: -
PDM DATABASE:
MODEL NAME: 060213MFA105_ACCESS_HTCH_DBLR
CHECK FOR ANY OUTSTANDING ECO'S PRIOR TO USE

SIZE	DRAWING NUMBER	REV	BLDG	AREA
E	060213MFA105	-	50	HI BAY

UNITS: INCH

SCALE:	INITIAL REL DATE	SHEET	DISCIPLINE
1/8	XX/XX/2007	1 OF 1	MECHANICAL

PRO/E VERSION: Wildfire 2.0

SIZE E DRAWING NUMBER 060213MFA105 REV -

NAME:AYNIK OBJECT:060213MFA105_ACCESS_HTCH_DBLR DATE:21-Nov-07 09:19:57