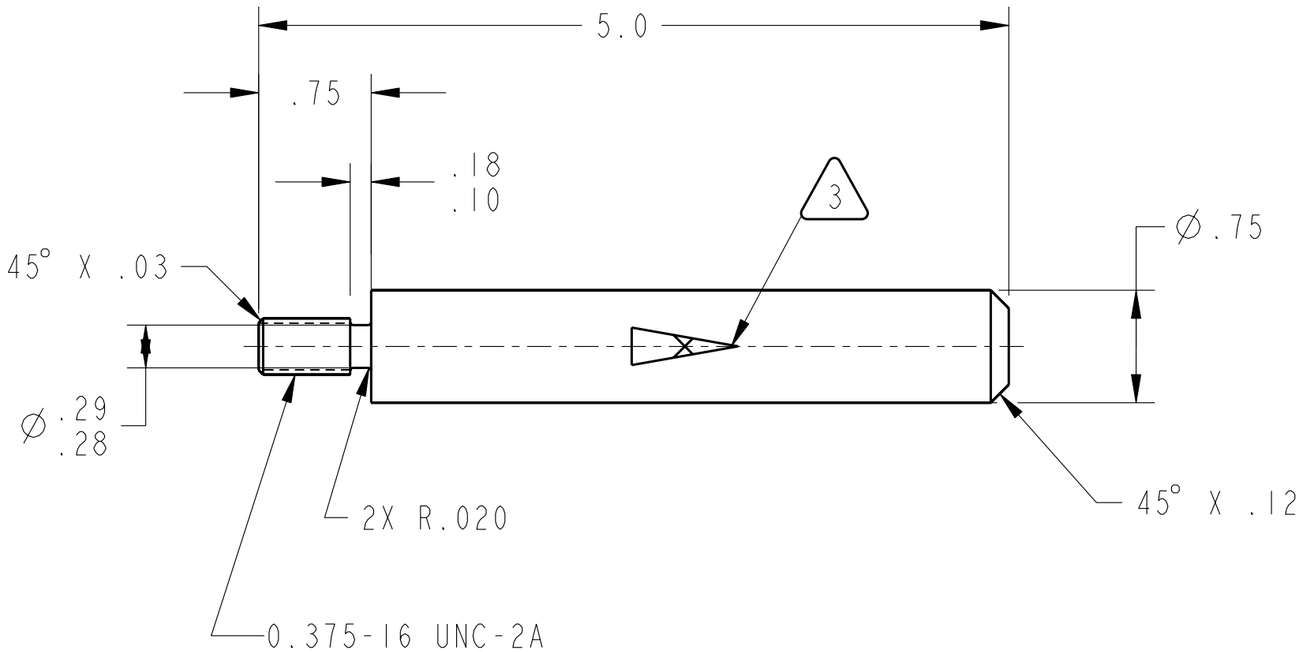

1. MATERIAL: 4340 STEEL. CERTIFICATE OF CONFORMANCE REQUIRED.

2. 125 Ra ALL OVER.

3. ELECTROCHEMICAL ETCH OR ELECTRIC ARC SCRIBE DRAWING PART NUMBER 060213MFA109 ON SPECIFIED SURFACE PER SAE-AS478, METHOD 7A, AS SHOWN. ADD SERIAL NUMBER -01, AND -02 TO RESPECTIVE PARTS.

Distributed by AIX USS CMO on 11/21/07
For Procurement Use Only

CHG	ZONE	DESCRIPTION	APP/DATE

REVISIONS

PRIOR TO USE VERIFY THE INTENDED PURPOSE IN PDM ("FOR" ATTRIBUTE)

UNLESS OTHERWISE SPECIFIED DIMENSIONS ARE IN INCHES

CONTRACT

CONTRACTOR ASRC AEROSPACE

TOLERANCE ON		TASK ORDER	
.X	± 0.03	DRAFTER	ASRC/ M.AYNIK
.XX	± 0.02	ENGINEER	DES/ J.RAMSEY
.XXX	±	DESIGNER	ASRC/ M.AYNIK
FRACTION	± -		
ANGULAR	± 0.50°		
BREAK EDGES	.02-.03		

DIMENSIONING AND TOLERANCING PER ASME Y14.5M-1994

NATIONAL AERONAUTICS AND SPACE ADMINISTRATION
JOHN H. GLENN RESEARCH CENTER
LEWIS FIELD
CLEVELAND, OHIO

ACCESS HATCH COVER ASSEMBLY

060213MFA106

A109 HANDLE, ACCESS HATCH COVER

PDM REL LEVEL: Design PDM REVISION: -

PDM DATABASE:

MODEL NAME: 060213MFA109_HANDLE_ACCES_HTCH

CHECK FOR ANY OUTSTANDING ECO'S PRIOR TO USE

SIZE	DRAWING NUMBER	REV	BLDG	AREA
B	060213MFA109	-	50	HI BAY
			UNITS: INCH	
SCALE: 1/1	INITIAL REL DATE XX/XX/2007	SHEET 1 OF 1	DISCIPLINE MECHANICAL	

PRO/E VERSION: Wildfire 2.0

SIZE B DRAWING NUMBER 060213MFA109 REV -

NAME:MAYNIK OBJECT:060213MFA109_HANDLE_ACCES_HTCH DATE:21-Nov-07 09:21:33