1. MATERIAL: ASTM A36, STEEL T-BEAM, WT10.5 X 46.5 (10.81 X 8.42 NOMINAL SIZE X .58 WEB). CERTIFICATE OF CONFORMANCE REQUIRED.

2. 125 Ra ALL MACHINED SURFACES.

3. METAL STAMP DRAWING PART NUMBER 060213MFA115 ON SPECIFIED SURFACE, PER SAE-AS478, METHOD 2A2 (ZONE F4). ADD SERIAL NUMBER -01, AND 02 TO RESPECTIVE PARTS.

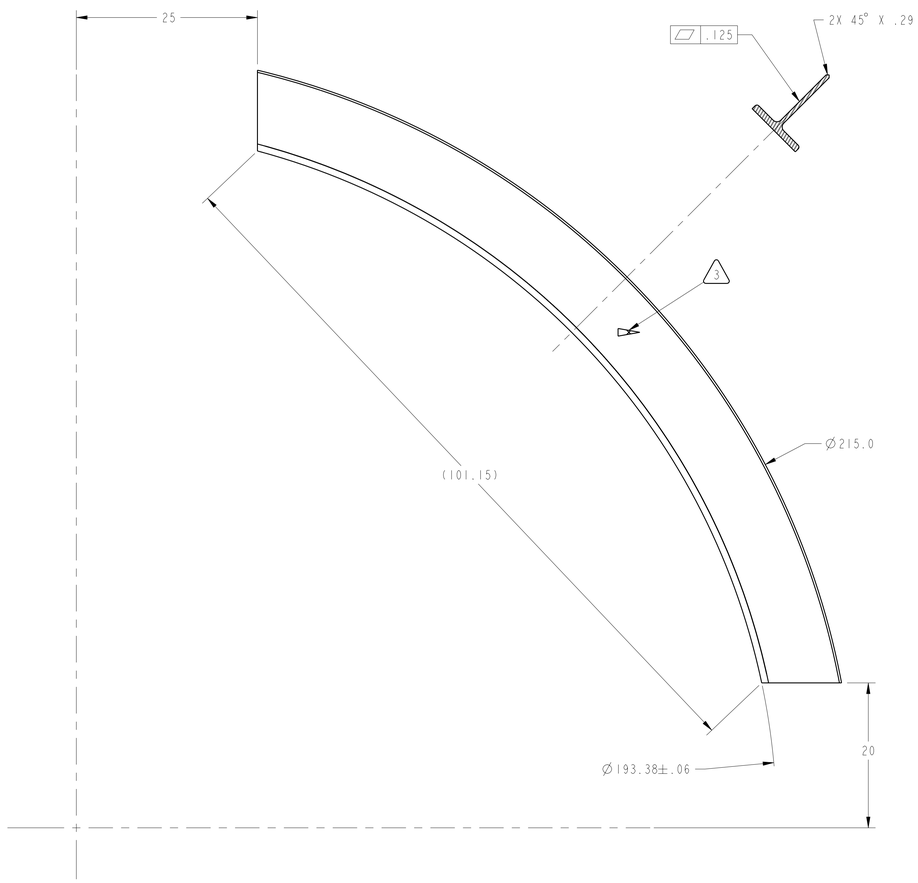

PROCUREMENT ONLY

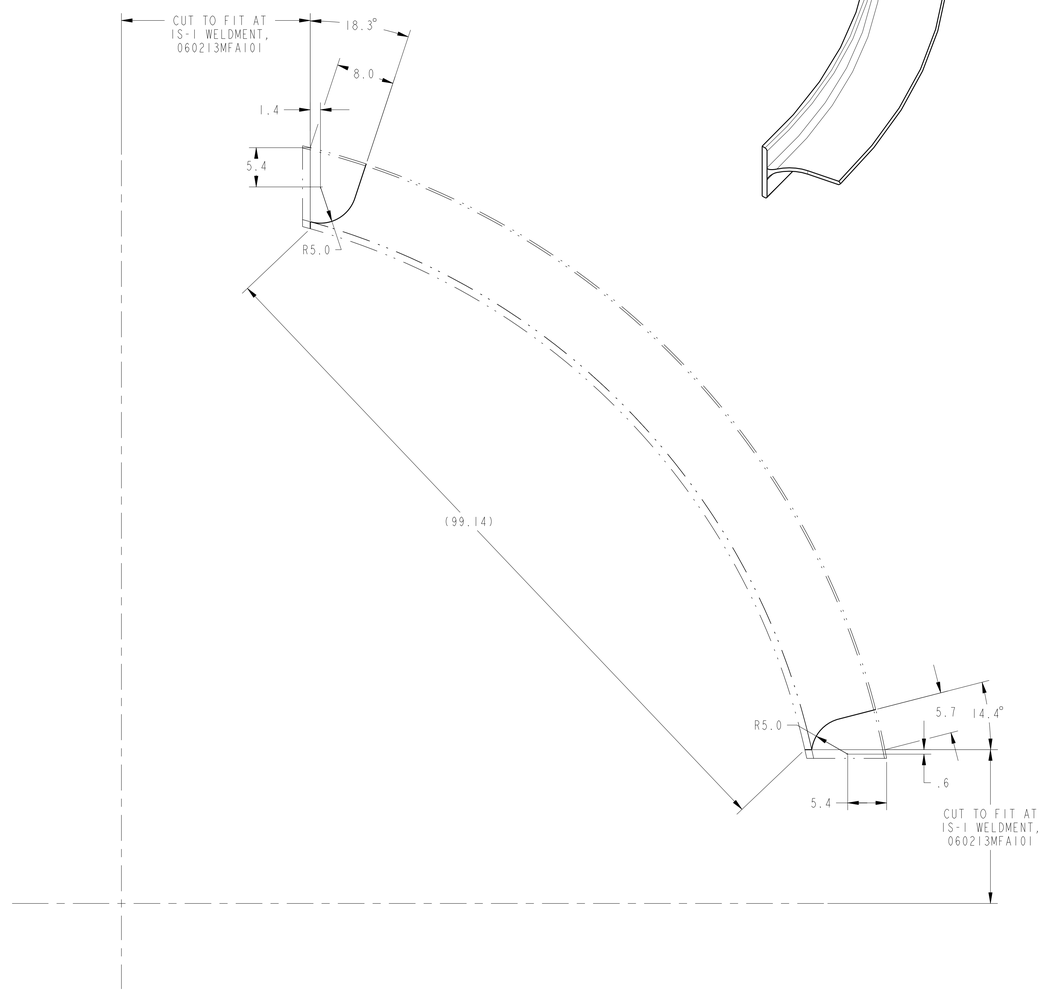

FOR SHOP ONLY

Distributed by AIX USS CMO on 11/21/07
For Procurement Use Only

CHG	ZONE	DESCRIPTION	APP/DATE

REVISIONS

PRIOR TO USE VERIFY THE INTENDED PURPOSE IN PDM ("FOR" ATTRIBUTE)

UNLESS OTHERWISE SPECIFIED DIMENSIONS ARE IN INCHES

CONTRACT
CONTRACTOR ASRC AEROSPACE

TOLERANCE ON		TASK ORDER	
.X	± 0.03	DRAFTER	ASRC/ M.AYNIK
.XX	± 0.02	ENGINEER	DES/ J. RAMSEY
.XXX	±	DESIGNER	ASRC/ M. AYNIK
FRACTION	± -	DIMENSIONING AND TOLERANCING PER ASME Y14.5M-1994	
ANGULAR	± 0.50°		
BREAK EDGES	.02-.03		

NATIONAL AERONAUTICS AND SPACE ADMINISTRATION
JOHN H. GLENN RESEARCH CENTER
LEWIS FIELD
CLEVELAND, OHIO

IS-1 (WELDMENT)
060213MFA101

A115 T-BULKHEAD, SHORT

PDM REL LEVEL: Design PDM REVISION: -
PDM DATABASE:
MODEL NAME: 060213MFA115_T_BLKHD_SHORT_PROC
CHECK FOR ANY OUTSTANDING ECO'S PRIOR TO USE

SIZE	DRAWING NUMBER	REV	BLDG	AREA
E	060213MFA115	-	50	HI BAY

UNITS: INCH

SCALE:	INITIAL REL DATE	SHEET	DISCIPLINE
1/8	XX/XX/2007	1 OF 1	MECHANICAL

PRO/E VERSION: Wildfire 2.0

SIZE E DRAWING NUMBER 060213MFA115 REV -

NAME:MAYNIK OBJECT:060213MFA115_T_BLKHD_SHORT DATE:24-Nov-07 09:56:59