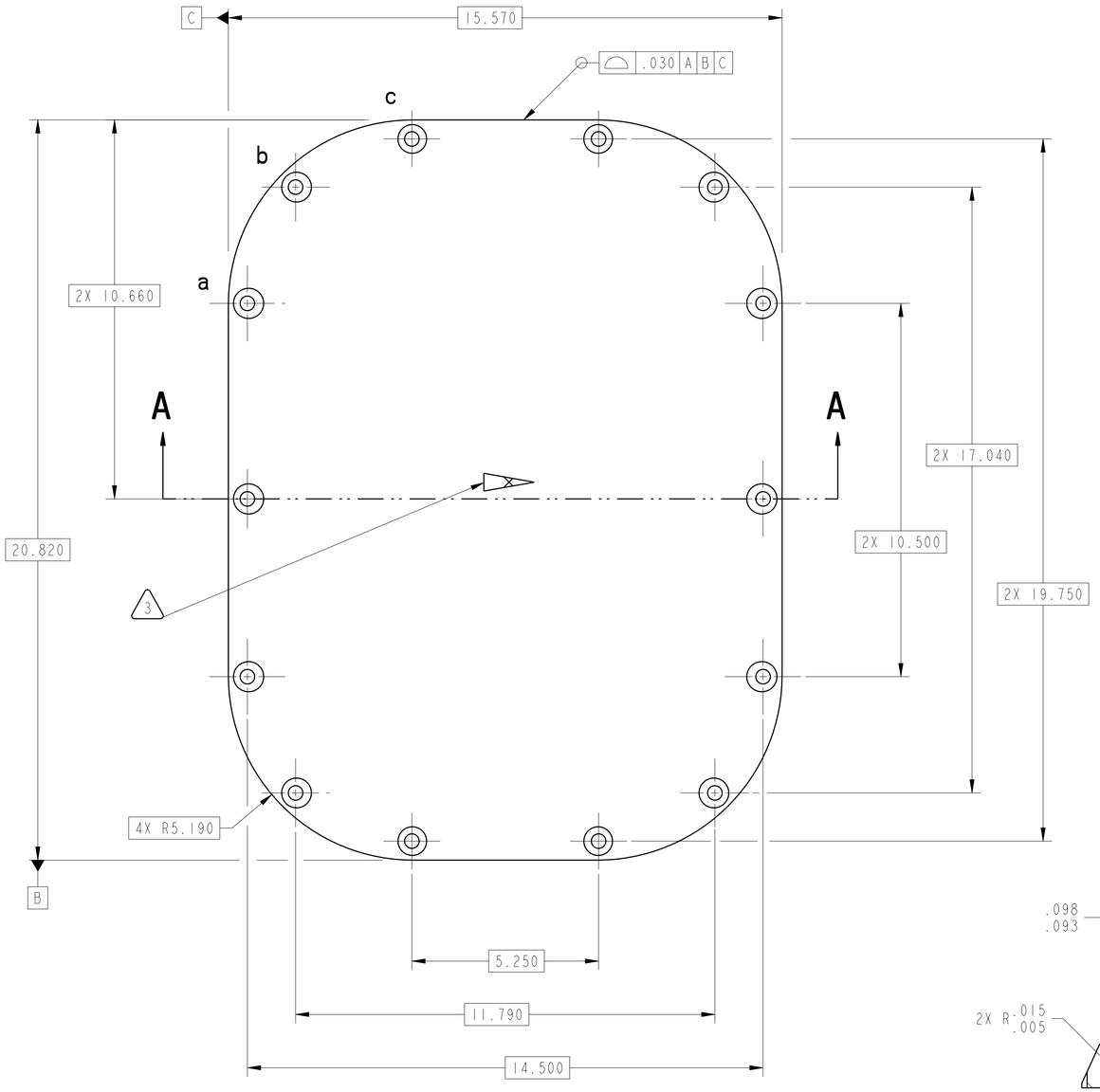

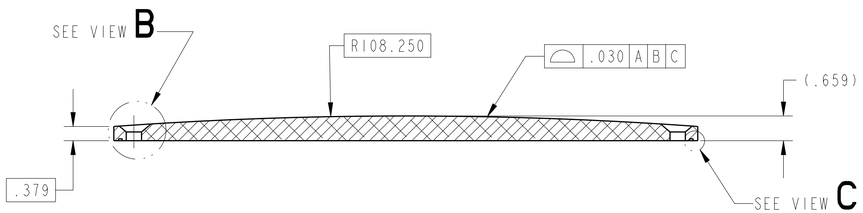

A-A

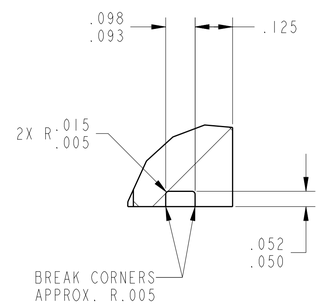

DETAIL C
ALL AROUND
SCALE: 4/1

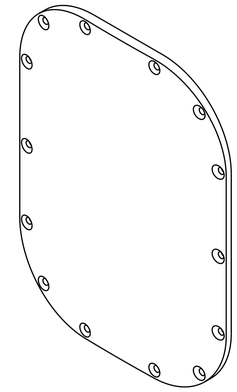

SCALE: 1/4

HOLE DEPTH CHART		
LOCATION	X	PLACES
a	.230	6
b	.320	4
c	.461	4

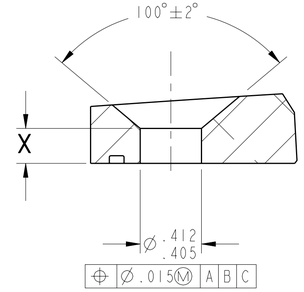

DETAIL B
TYP 14 PLACES
SCALE: 2/1

1. MATERIAL: 6061-T651
   ALUMINUM PER SAE-AMS-QQ-A-250/11.
   CERTIFICATE OF CONFORMANCE REQUIRED.

2. 125 Ra ALL MACHINED SURFACES.

3. METAL STAMP DRAWING PART NUMBER 060213MFA120 ON SPECIFIED SURFACE, PER SAE-AS478, METHOD 2A2 (ZONE C6).

Distributed by AIX USS CMO on 11/21/07
For Procurement Use Only

CHG	ZONE	DESCRIPTION	APP/DATE

REVISIONS

PRIOR TO USE VERIFY THE INTENDED PURPOSE IN PDM ("FOR" ATTRIBUTE)

UNLESS OTHERWISE SPECIFIED DIMENSIONS ARE IN INCHES

CONTRACT
CONTRACTOR ASRC AEROSPACE

TOLERANCE ON		TASK ORDER	
.X	± 0.03	DRAFTER	ASRC/ M.AYNIK
.XX	± 0.01	ENGINEER	DES/ J. RAMSEY
.XXX	± 0.01	DESIGNER	ASRC/ M. AYNIK
FRACTION	± -	DIMENSIONING AND TOLERANCING PER ASME Y14.5M-1994	
ANGULAR	± 0.50°		
BREAK EDGES	.02-.03		

PDM REL LEVEL: Design PDM REVISION: -
PDM DATABASE:
MODEL NAME: 060213MFA120_ECS_PANEL_COVER
CHECK FOR ANY OUTSTANDING ECO'S PRIOR TO USE

NATIONAL AERONAUTICS AND SPACE ADMINISTRATION
JOHN H. GLENN RESEARCH CENTER
LEWIS FIELD
CLEVELAND, OHIO

IS-1 (WELDMENT)
060213MFA101

A120 ECS PANEL COVER

SIZE	DRAWING NUMBER	REV	BLDG	AREA
D	060213MFA120	-	50	HI BAY

UNITS: INCH

SCALE:	INITIAL REL DATE	SHEET	DISCIPLINE
1/2 AND NOTED	XX/XX/2007	1 OF 1	MECHANICAL

PRO/E VERSION: Wildfire 2.0

SIZE D DRAWING NUMBER 060213MFA120 REV -

NAME:AYNIK OBJECT:060213MFA120_ECS_PANEL_COVER DATE:21-Nov-07 09:30:07