1. MATERIAL: ASTM A36 STEEL, CERTIFICATE OF CONFORMANCE REQUIRED.

2. 125Ra ALL MACHINED SURFACES.

3. METAL STAMP DRAWING PART NUMBER 060213MFA624 ON SPECIFIED SURFACE. IF QUANTITY IS GREATER THAN ONE, ADD SERIAL NUMBER -01 TO -XX, PER SAE-AS478, METHOD 2A2 (ZONE B7).

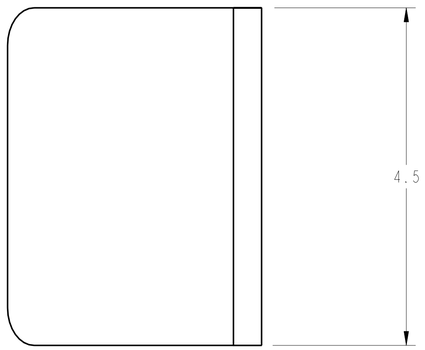

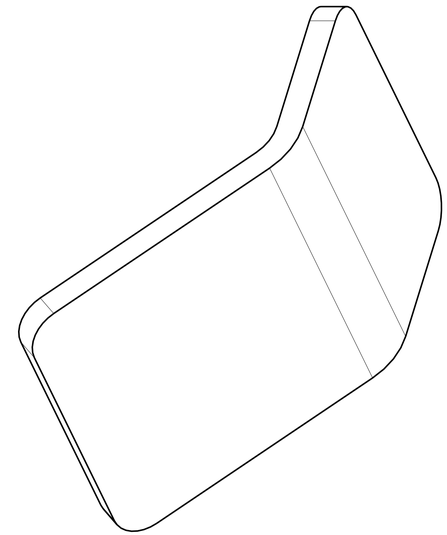

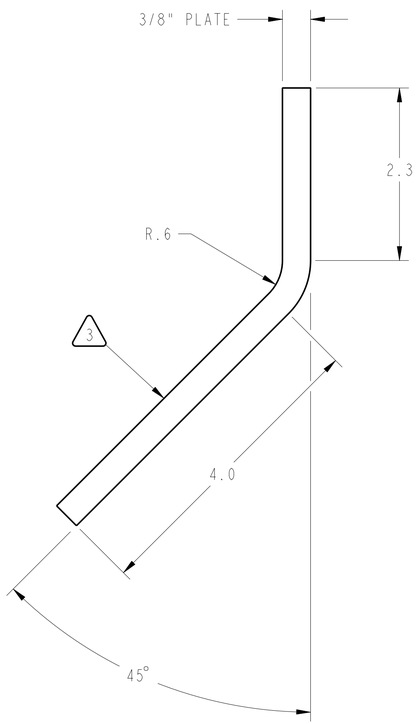

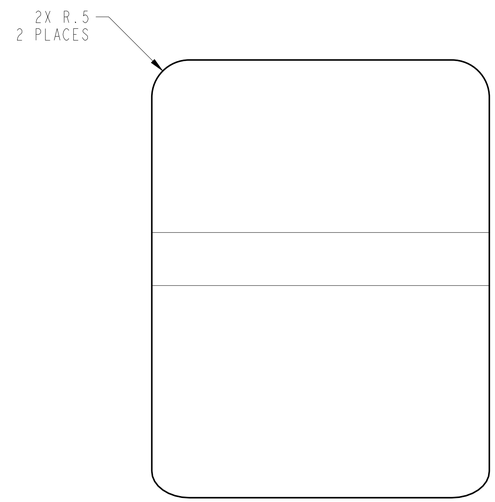

Distributed by AIX USS CMO on 11/21/07
For Procurement Use Only

CHG	ZONE	DESCRIPTION	APP/DATE

REVISIONS

PRIOR TO USE VERIFY THE INTENDED PURPOSE IN PDM ("FOR" ATTRIBUTE)

UNLESS OTHERWISE SPECIFIED DIMENSIONS ARE IN INCHES		CONTRACT / CONTRACTOR	
TOLERANCE ON		TASK ORDER	
.X	± 0.03	DRAFTER	DEZ/G. DUTT
.XX	± -	ENGINEER	DES/J. HUNTER
.XXX	± -	DESIGNER	DEZ/G. DUTT
FRACTION	± -	DIMENSIONING AND TOLERANCING PER ASME Y14.5M-1994	
ANGULAR	± 0.50°		
BREAK EDGES	.02-.03		

PDM REL LEVEL: Design PDM REVISION: -

PDM DATABASE:
MODEL NAME: 060213_US-7_GRATE_SUP-TAB2

CHECK FOR ANY OUTSTANDING ECO'S PRIOR TO USE

NATIONAL AERONAUTICS AND SPACE ADMINISTRATION
JOHN H. GLENN RESEARCH CENTER
LEWIS FIELD
CLEVELAND, OHIO

US-7 BALLAST ASSEMBLY

060213MFA600

A624 GRID PLATFORM SUPPORT TAB B

SIZE	DRAWING NUMBER	REV	BLDG	AREA
D	060213MFA624	-	50	HI BAY
			UNITS: INCH	
SCALE: 1/1	INITIAL REL DATE XX/XX/2007	SHEET 1 OF 1	DISCIPLINE MECHANICAL	

PRO/E VERSION: Wildfire 2.0

SIZE D DRAWING NUMBER 060213MFA624 REV -

NAME:GRUTT OBJECT:060213MFA624_GRATE_SUP-TAB2 DATE:15-Nov-07 17:09:59