1. MATERIAL: ASTM A36 STEEL C CHANNEL, C6 X 10.5 (6.00 X 2.034 NOMINAL SIZE X .314 WEB). CERTIFICATE OF CONFORMANCE REQUIRED.

2. 125Ra ALL MACHINED SURFACES.

3. METAL STAMP DRAWING PART NUMBER 060213MFA627, ON SPECIFIED SURFACE, IF QUANTITY IS GREATER THAN ONE, ADD SERIAL NUMBER -01 TO -XX, PER SAE- AS478 METHOD 2A2 (ZONE C7).

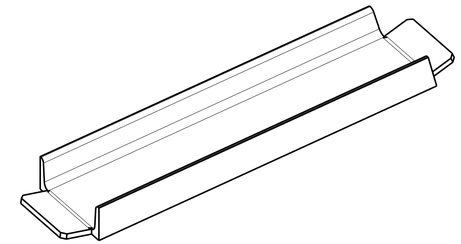

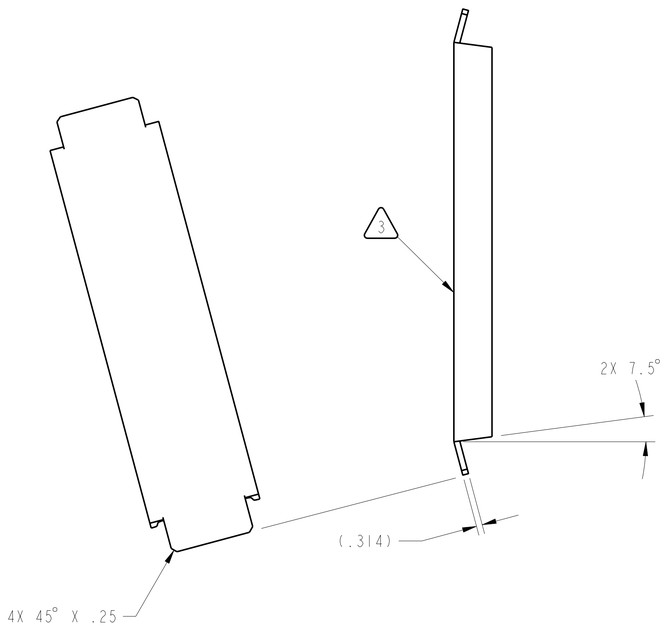

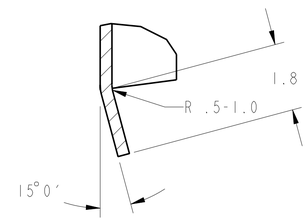

SECTION **A-A**
BOTH SIDES
SCALE 1/2

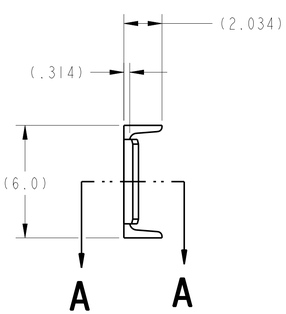

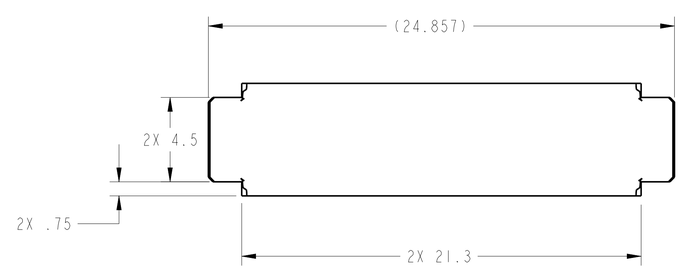

Distributed by AIX USS CMO on 11/21/07
For Procurement Use Only

CHG	ZONE	DESCRIPTION	APP/DATE

REVISIONS

PRIOR TO USE VERIFY THE INTENDED PURPOSE IN PDM ("FOR" ATTRIBUTE)

UNLESS OTHERWISE SPECIFIED DIMENSIONS ARE IN INCHES

CONTRACT
CONTRACTOR
TASK ORDER

TOLERANCE ON			
.X	± 0.03	DRAFTER	DEZ/G. DUTT
.XX	± 0.01	ENGINEER	DES/J. HUNTER
.XXX	± -	DESIGNER	DEZ/C. BLASER
FRACTION	± -		
ANGULAR	± 0.50°		
BREAK EDGES	.02-.03		

DIMENSIONING AND TOLERANCING PER ASME Y14.5M-1994

NATIONAL AERONAUTICS AND SPACE ADMINISTRATION
JOHN H. GLENN RESEARCH CENTER
LEWIS FIELD
CLEVELAND, OHIO

US-7 BALLAST ASSEMBLY

060213MFA600

A627 GRID THRU PLATFORM CHANNEL

PDM REL LEVEL: Design PDM REVISION: -
PDM DATABASE:
MODEL NAME: 060213MFA627_GRID_CHNL_THRU
CHECK FOR ANY OUTSTANDING ECO'S PRIOR TO USE

SIZE	DRAWING NUMBER	REV	BLDG	AREA
D	060213MFA627	-	50	HI BAY

UNITS: INCH

SCALE:	INITIAL REL DATE	SHEET	DISCIPLINE
1/4	XX/XX/2007	1 OF 1	MECHANICAL

PRO/E VERSION: Wildfire 2.0

SIZE D DRAWING NUMBER 060213MFA627 REV -

NAME:GDUTT OBJECT:060213MFA627_GRID_CHNL_THRU DATE:15-Nov-07 17:10:33