1. MATERIAL: ASTM A36 STEEL C CHANNEL, C6 X 10.5 (6.00 X 2.034 NOMINAL SIZE X .314 WEB). CERTIFICATE OF CONFORMANCE REQUIRED.

2. 125Ra ALL MACHINED SURFACES.

3. METAL STAMP DRAWING PART NUMBER 060213MFA630, ON SPECIFIED SURFACE, IF QUANTITY GREATER THAN ONE ADD SERIAL NUMBER -01 TO -XX, PER SAE- AS478, METHOD 2A2 (ZONE C4).

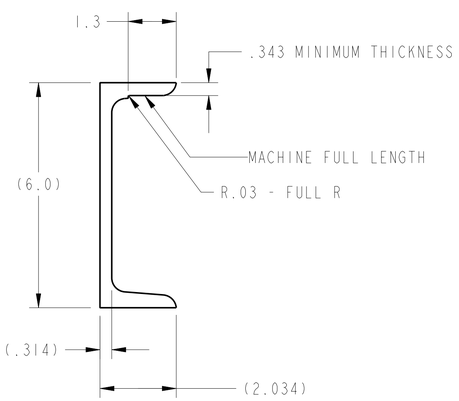

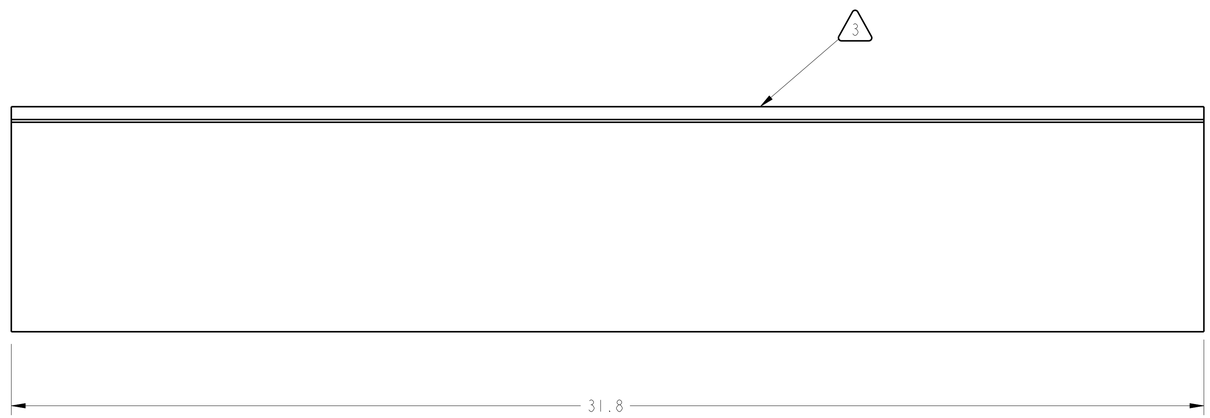

Distributed by AIX USS CMO on 11/21/07
For Procurement Use Only

CHG	ZONE	DESCRIPTION	APP/DATE

REVISIONS

PRIOR TO USE VERIFY THE INTENDED PURPOSE IN PDM ("FOR" ATTRIBUTE)

UNLESS OTHERWISE SPECIFIED DIMENSIONS ARE IN INCHES

CONTRACT
CONTRACTOR

TOLERANCE ON		TASK ORDER	
.X	± 0.03	DRAFTER	DEZ/G. DUTT
.XX	± -	ENGINEER	DES/J. HUNTER
.XXX	± -	DESIGNER	DEZ/C. BLASER
FRACTION	± -	DIMENSIONING AND TOLERANCING PER ASME Y14.5M-1994	
ANGULAR	± -		
BREAK EDGES	.02-.03		

PDM REL LEVEL: Design PDM REVISION: -
PDM DATABASE:
MODEL NAME: 060213MFA630_GRID_CHNL_C
CHECK FOR ANY OUTSTANDING ECO'S PRIOR TO USE

NATIONAL AERONAUTICS AND SPACE ADMINISTRATION
JOHN H. GLENN RESEARCH CENTER
LEWIS FIELD
CLEVELAND, OHIO

US-7 BALLAST ASSEMBLY
060213MFA600

A630 GRID CHANNEL C

SIZE	DRAWING NUMBER	REV	BLDG	AREA
D	060213MFA630	-	50	HI BAY
			UNITS: INCH	
SCALE: 1/2	INITIAL REL DATE XX/XX/2007	SHEET 1 OF 1	DISCIPLINE MECHANICAL	

PRO/E VERSION: Wildfire 2.0

SIZE D DRAWING NUMBER 060213MFA630 REV -

NAME:GRIDUT OBJECT:060213MFA630_GRID_CHNL_C DATE:15-Nov-07 17:13:25