1. MATERIAL: ASTM A36 STEEL.
   CERTIFICATE OF CONFORMANCE REQUIRED.

2. 125Ra ALL MACHINED SURFACES.

3. METAL STAMP DRAWING PART NUMBER 060213MFA632 ON SPECIFIED SURFACE. IF QUANTITY IS GREATER THAN ONE, ADD SERIAL NUMBER -01 TO -XX, PER SAE-AS478, METHOD 2A2 (ZONE C6).

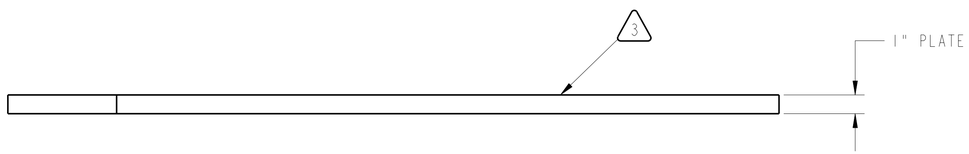

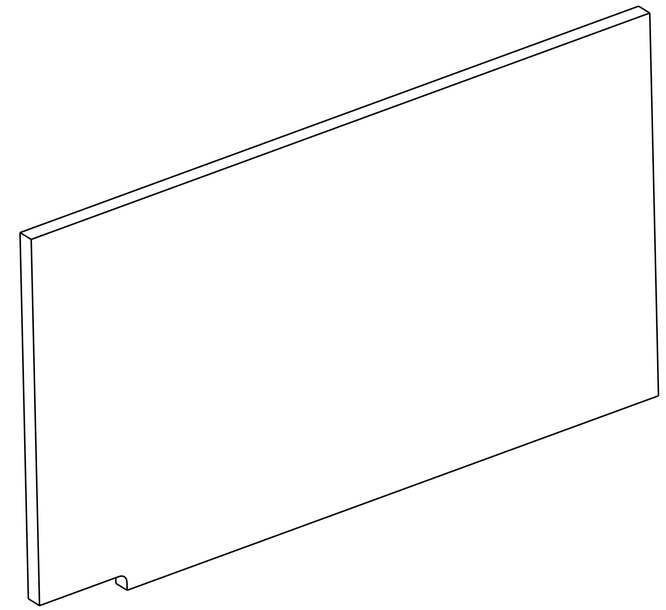

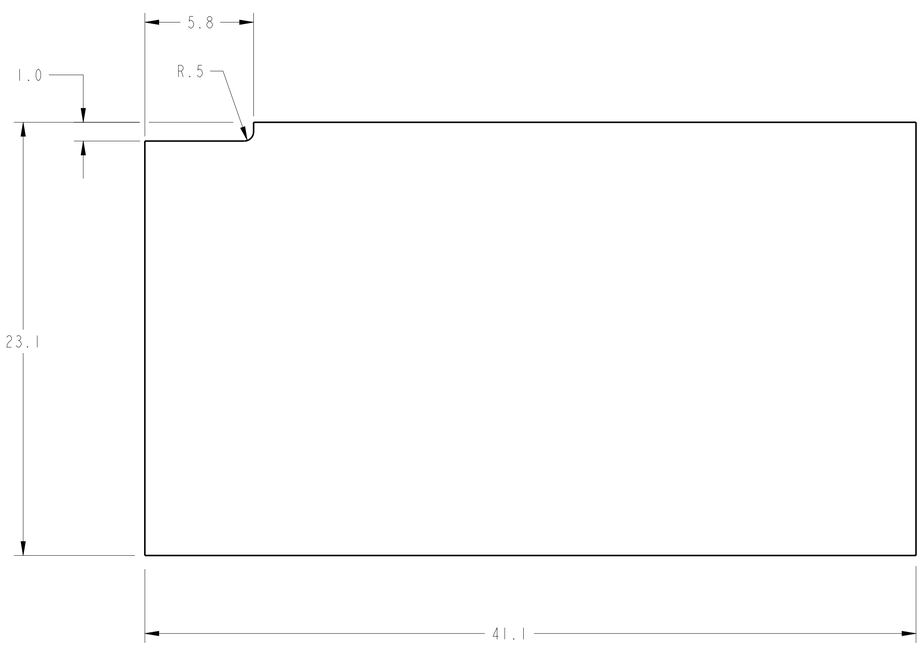

Distributed by AIX USS CMO on 11/21/07
For Procurement Use Only

CHG	ZONE	DESCRIPTION	APP/DATE

REVISIONS

PRIOR TO USE VERIFY THE INTENDED PURPOSE IN PDM ("FOR" ATTRIBUTE)

UNLESS OTHERWISE SPECIFIED DIMENSIONS ARE IN INCHES

TOLERANCE ON	
.X	± 0.03
.XX	± -
.XXX	± -
FRACTION	± -
ANGULAR	± -
BREAK EDGES	.01-.03

CONTRACT
CONTRACTOR
TASK ORDER

DRAFTER	DEZ/D. MIKITKA
ENGINEER	DEZ/J. HUNTER
DESIGNER	DEZ/C. BLASER

DIMENSIONING AND TOLERANCING PER ASME Y14.5M-1994

NATIONAL AERONAUTICS AND SPACE ADMINISTRATION
JOHN H. GLENN RESEARCH CENTER
LEWIS FIELD
CLEVELAND, OHIO

US-7 BALLAST ASSEMBLY
060213MFA600

A632 STEEL GUSSET SIDE

PDM REL LEVEL: Design PDM REVISION: -
PDM DATABASE:
MODEL NAME: 060213MFA632_STEEL_GUS
CHECK FOR ANY OUTSTANDING ECO'S PRIOR TO USE

SIZE	DRAWING NUMBER	REV	BLDG	AREA
D	060213MFA632	-	50	HI BAY

UNITS: INCH

SCALE:	INITIAL REL DATE	SHEET	DISCIPLINE
1/4	XX/XX/2007	1 OF 1	MECHANICAL

PRO/E VERSION: Wildfire 2.0

SIZE D DRAWING NUMBER 060213MFA632 REV -

NAME:GDUT OBJECT:060213MFA632_STEEL_GUS DATE:13-Nov-07 17:14:43