1. MATERIAL: ASTM A36 STEEL. CERTIFICATE OF CONFORMANCE REQUIRED.

2. 125Ra ALL MACHINED SURFACES.

3. METAL STAMP DRAWING PART NUMBER 060213MFA634, ON SPECIFIED SURFACE, PER SAE- AS478, METHOD 2A2 (ZONE D5).

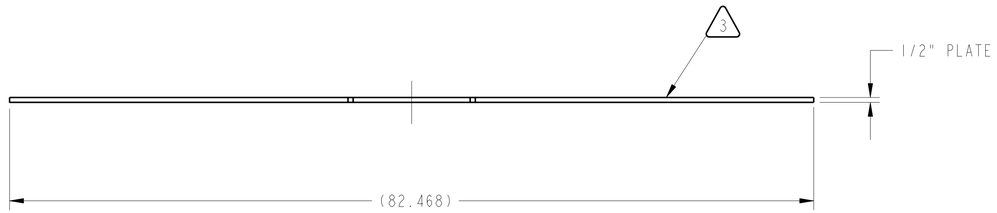

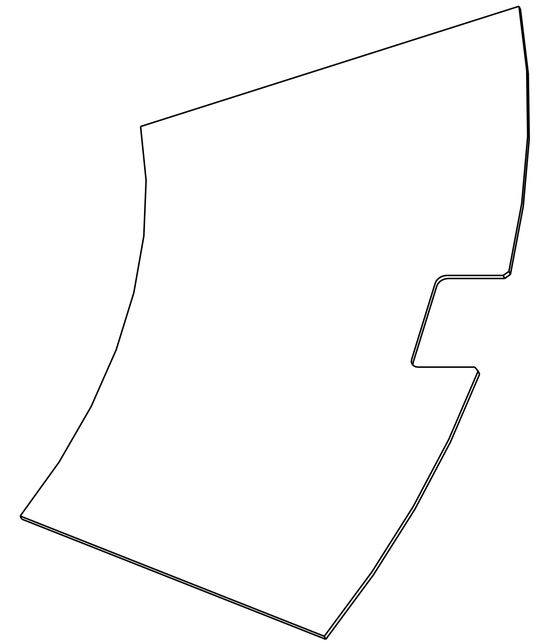

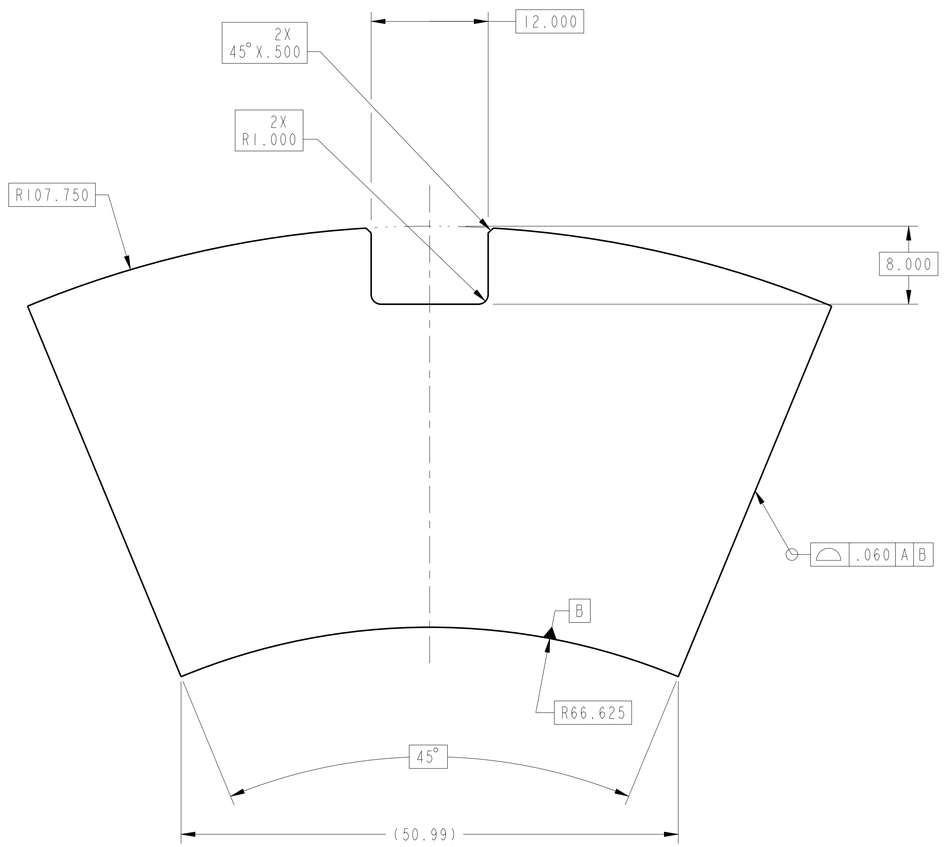

Distributed by AIX USS CMO on 11/21/07
For Procurement Use Only

CHG	ZONE	DESCRIPTION	APP/DATE

REVISIONS

PRIOR TO USE VERIFY THE INTENDED PURPOSE IN PDM ("FOR" ATTRIBUTE)

UNLESS OTHERWISE SPECIFIED DIMENSIONS ARE IN INCHES

CONTRACT

CONTRACTOR

TOLERANCE ON		TASK ORDER	
.X	± 0.03	DRAFTER	DEZ/D. MIKITKA
.XX	± 0.01	ENGINEER	DES/J. HUNTER
.XXX	± 0.005	DESIGNER	DEZ/C. BLASER
FRACTION	± -	DIMENSIONING AND TOLERANCING PER ASME Y14.5M-1994	
ANGULAR	± 0.50°		
BREAK EDGES	.02-.03		

PDM REL LEVEL: Released PDM REVISION: -

PDM DATABASE:

MODEL NAME: 060213MFA634_STEEL_GUS_DFI_WKWY

CHECK FOR ANY OUTSTANDING ECO'S PRIOR TO USE

NATIONAL AERONAUTICS AND SPACE ADMINISTRATION
JOHN H. GLENN RESEARCH CENTER
LEWIS FIELD
CLEVELAND, OHIO

US-7 BALLAST ASSEMBLY

060213MFA600

A634 STEEL GUSSET DFI WALKWAY TOP

SIZE	DRAWING NUMBER	REV	BLDG	AREA
D	060213MFA634	-	50	HI BAY

UNITS: INCH

SCALE:	INITIAL REL DATE	SHEET	DISCIPLINE
13/100	11/19/2007	1 OF 1	MECHANICAL

PRO/E VERSION: Wildfire 2.0

SIZE D DRAWING NUMBER 060213MFA634 REV -

NAME:GDUTT OBJECT:060213MFA634_STEEL_GUS_DFI_WKWY DATE:21-Nov-07 10:27:03