1. MATERIAL: ASTM A36 STEEL.CERTIFICATE OF CONFORMANCE REQUIRED.

2. 125Ra ALL MACHINED SURFACES.

3. METAL STAMP DRAWING PART NUMBER 060213MFA638, ON SPECIFIED SURFACE, PER SAE- AS478, METHOD 2A2 (ZONE D5).

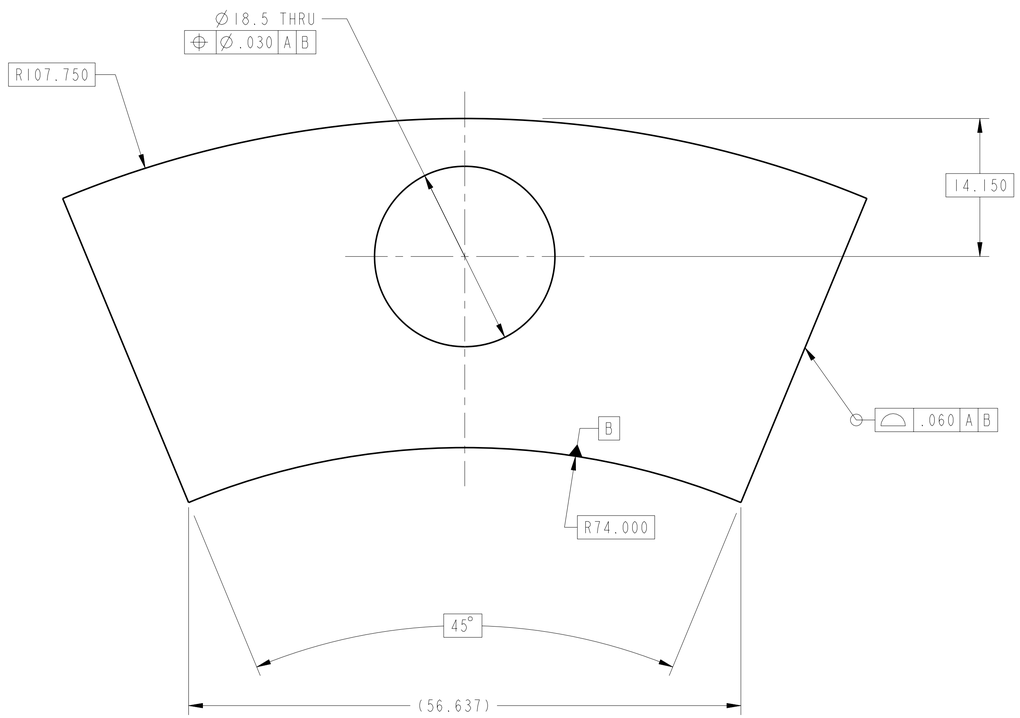

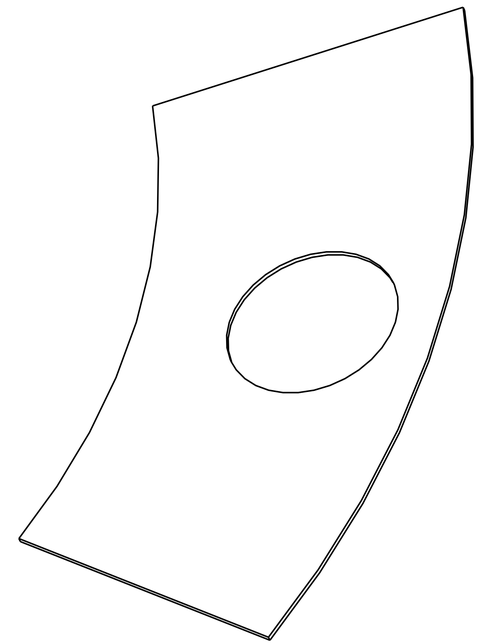

Distributed by AIX USS CMO on 11/21/07
For Procurement Use Only

CHG	ZONE	DESCRIPTION	APP/DATE

REVISIONS

PRIOR TO USE VERIFY THE INTENDED PURPOSE IN PDM ("FOR" ATTRIBUTE)

UNLESS OTHERWISE SPECIFIED DIMENSIONS ARE IN INCHES

CONTRACT
CONTRACTOR
TASK ORDER

TOLERANCE ON	
.X	± 0.03
.XX	± -
.XXX	± -
FRACTION	± -
ANGULAR	± -
BREAK EDGES	.02-.03

DRAFTER	DEZ/D. MIKITKA
ENGINEER	DES/J. HUNTER
DESIGNER	DEZ/C. BLASER

DIMENSIONING AND TOLERANCING PER ASME Y14.5M-1994

NATIONAL AERONAUTICS AND SPACE ADMINISTRATION
JOHN H. GLENN RESEARCH CENTER
LEWIS FIELD
CLEVELAND, OHIO

US-7 BALLAST ASSEMBLY

060213MFA600

A638 STEEL GUSSET ECS WALKWAY BOTTOM

PDM REL LEVEL: Released PDM REVISION: -
PDM DATABASE:
MODEL NAME: 060213MFA638_GUS_ECS_WKWY_BOT
CHECK FOR ANY OUTSTANDING ECO'S PRIOR TO USE

SIZE	DRAWING NUMBER	REV	BLDG	AREA
D	060213MFA638	-	50	HI BAY

UNITS: INCH

SCALE:	INITIAL REL DATE	SHEET	DISCIPLINE
1/8	11/19/2007	1 OF 1	MECHANICAL

PRO/E VERSION: Wildfire 2.0

SIZE D DRAWING NUMBER 060213MFA638 REV -

NAME:CDUTT OBJECT:060213MFA638_GUS_ECS_WKWY_BOT DATE:21-Nov-07 10:30:11