1. ROOT GAP DIMENSIONS ARE SPECIFIED ON THE WELD PROCEDURE SPECIFICATIONS (WPS).

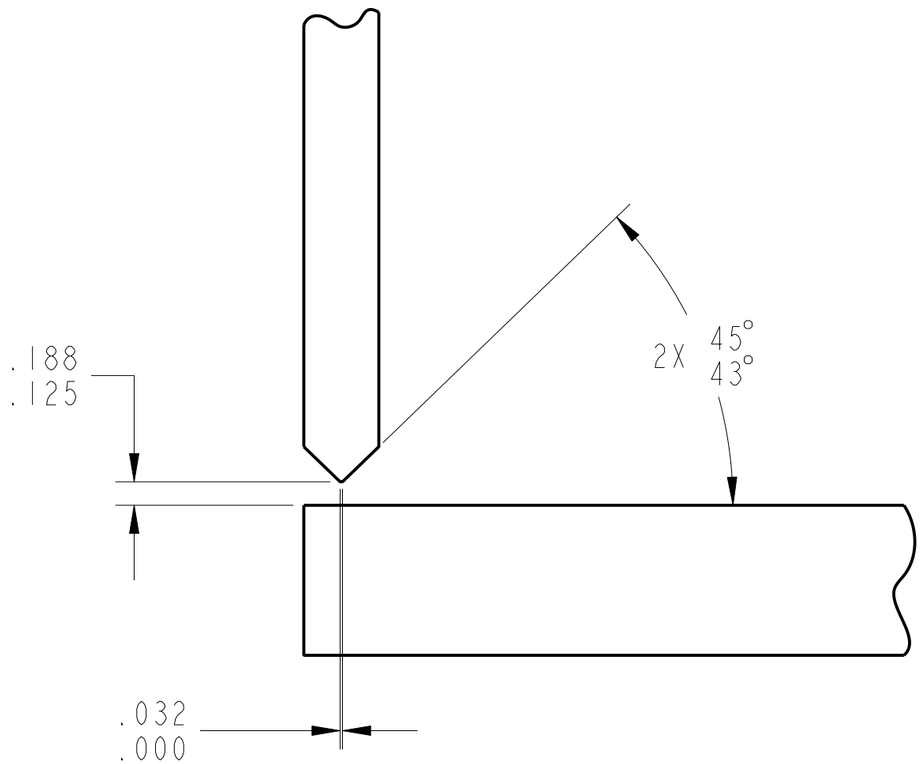

Distributed by AIX USS CMO on 11/21/07
For Procurement Use Only

CHG	ZONE	DESCRIPTION	APP/DATE
A	-	SEE ECO CHANGE NUMBERS AIX-ECR-123 AIX-ECR-132	CMB 09/10/07

REVISIONS

PRIOR TO USE VERIFY THE INTENDED PURPOSE IN PDM ("FOR" ATTRIBUTE)

UNLESS OTHERWISE SPECIFIED DIMENSIONS ARE IN INCHES

TOLERANCE ON	
.X	±
.XX	±
.XXX	±
FRACTION	± -
ANGULAR	±
BREAK EDGES	-

CONTRACT

CONTRACTOR

TASK ORDER	
DRAFTER	DEZ/R. CLAPPER
ENGINEER	SAIC/S. ANZALONE
DESIGNER	DES/K. BERGQUIST

DIMENSIONING AND TOLERANCING PER ASME Y14.5M-1994

NATIONAL AERONAUTICS AND SPACE ADMINISTRATION
JOHN H. GLENN RESEARCH CENTER
LEWIS FIELD
CLEVELAND, OHIO

ARES I-X

A932 SKIN-FLANGE WELD PREPERATION

PDM REL LEVEL: **Released** PDM REVISION: **A**

PDM DATABASE:

MODEL NAME: **060213MFA932_SKIN_TO_FLANGE**

CHECK FOR ANY OUTSTANDING ECO'S PRIOR TO USE

SIZE	DRAWING NUMBER	REV	BLDG	AREA
B	060213MFA932	A	50	HI BAY

UNITS: INCH

SCALE:	INITIAL REL DATE	SHEET	DISCIPLINE
1/1	06/14/2007	1 OF 1	MECHANICAL

PRO/E VERSION: Wildfire 2.0

SIZE B DRAWING NUMBER 060213MFA932 REV A

NAME:CBLASER OBJECT:060213MFA932_SKIN_TO_FLANGE DATE:11-Sep-07 09:57:48