PARTS STATUS		

REVISIONS

EFF	REV	DESCRIPTION	DATE	APPROVED
N/A	A	INC ECO C171083	1/23/07	GL, AB

NOTES:

1. IDENTIFY PARTS PER TPS 4-1, DO NOT TAG PARTS.
2. SURFACE ROUGHNESS NOT TO EXCEED 125
3. OVERLAP ALL SPLICES .75±.25. NO SPLICES ON 0° PLIES. INDIVIDUAL PLY SPLICES MUST BE STAGGERED BY 1.00 OR MORE.
4. SHOWN BASIC DIMENSIONS AND TRUE POSITION TOLERANCES APPLY TO PHENOLIC BLOCK BORE CENTERS.
5. FABRICATE SANDWICH COMPOSITE PANELS PER TPS 2-503, CLASS B, TYPE II, METHOD 4, OR METHOD 1, GRADE B.
6. FABRICATE FIBERGLASS SKINS PER TPS2-522 TYPE I, GRADE B, COMPOSITION 3, FORM (b), CATEGORY (3).
7. BOND FIBERGLASS TO 96131518 FOAM CORE AND 96131525 PHENOLIC BLOCKS USING FM300-2K ADHESIVE.
8. BOND 96131518 FOAM CORE TO FOAM CORE USING FM410 ADHESIVE.
9. BOND 96131525 PHENOLIC BLOCKS TO 96131518 FOAM CORE USING FM410 ADHESIVE

10 SEAL EDGES OF PANELS WITH EPON(R)RESIN-815C EPOXY.

11 BOND PRESRAY PR23060-5 DOUBLE BULB SEAL TO FIBERGLASS (7781) USING MM000014-001, DOW CORNING 3145 RTV ADHESIVE.

12 TRIM PRESRAY PR23060-5 DOUBLE BULB SEAL FLUSH WITH END OF PANELS.

13 MAINTAIN .125 GAP BETWEEN FIBERGLASS PARTS.

14 MATCH DRILL HOLES IN FIBERGLASS TO EXISTING HOLES IN FOAM CORE.

15 MATCH TRIM HOLES IN FIBERGLASS TO EXISTING HOLES IN PHENOLIC BLOCKS.

16 FIBERGLASS LAYUP PER TABLE 1:

16 TABLE 1

PLY	ORIENTATION	MATERIAL
1	0°	7781 FIBERGLASS
2	45°	7781 FIBERGLASS
3	0°	7781 FIBERGLASS
4	45°	7781 FIBERGLASS
5	0°	7781 FIBERGLASS

17 BOND TEFLON FILM PFA-500-CLP TO FIBERGLASS USING FM-3002K ADHESIVE. TRIM IF NECESSARY, TO CLEAR THE HOLES.

18 MASK TEFLON FILM BEFORE APPLYING FINISH, ALSO MASK ALL HOLES.

19 APPLY POLYAMIDE YELLOW PRIMER PRC-DeSOTO, EEAY051A BASE AND EEY051B CURING SOLUTION.
APPLY TOP COAT PAINT PRC-DeSOTO CA 8271/F37038 PER SOF-SPO-SPE-2150-0026 SPECIFICATION
ON ALL THE IML SURFACES (OPPOSITE THE URD) OF MAIN INSULATION PANELS.
MASK DOUBLE SEAL BEFORE APPLYING PAINT ON SEAL SURFACE SIDE OF SEAL INSULATION PANELS.
ALSO MASK PLT HOLES.

20 FIBERGLASS LAYUP PER TABLE 2:

20 TABLE 2

PLY	ORIENTATION	MATERIAL
1	0°	7781 FIBERGLASS
2	45°	7781 FIBERGLASS
3	45°	7781 FIBERGLASS
4	0°	7781 FIBERGLASS

CODE FEE PDM LEVEL	
DASH NUMBER	REV LEVEL
-001	2.X
-003	2.X
-005	3.X
-006	2.X
-007	2.X
-008	2.X
-009	2.X
-010	2.X
-011	3.X
-012	2.X
-013	2.X
-015	3.X
-017	3.X
-019	2.X
-021	2.X
-023	2.X

REV	A	A	A	A	A	A				
SHEET	21	22	23	24	25	26				
REV	A		A	A	A	A	A	A	A	A
SHEET	11	12	13	14	15	16	17	18	19	20
REV	A		A	A		A	A	A	A	
SHEET	1	2	3	4	5	6	7	8	9	10

REVISION STATUS OF SHEETS

UNLESS OTHERWISE SPECIFIED
1. ALL DIMENSIONS IN INCHES AND INCLUDE APPLIED FINISH.
2. TOLERANCES: 2 PLACE DECIMALS ±.03, FRACTIONS ±1/16
3 PLACE DECIMALS ±.010, ANGLES ±1/2°
HOLE DIAMETERS PER G6016.80.95
REPETITIVE FEATURE IS NON-CUMULATIVE
3. FABRICATION PRACTICES PER PR-W0008-000.
4. PRACTICES AND STANDARDS PER G6016.00.98.
5. ALL DIMENSIONS REFERENCE (mm).
6. ALL NON-METALLIC MATERIALS (INCLUDING FINISHES AND DECORATIVE SURFACES) AND ELECTRICAL WIRE/CABLE WHICH TESTED PER FAR PART 25, APP. F, SHALL MEET THE CRITERIA OF FARS PART 25.853, AMDT. 25-83 AND 25.869, AMDT. 25-72.

DASH	NEXT ASSEMBLY	USED ON	NEXT ASSY	FINAL ASSY
APPLICATION			QTY REQD	

CONTRACT NUMBER
USRA-8500-02

APVD	T RODGERS	04-10-06
ENGR	D GILLESPIE	04-10-06
ENGR	A BELCHS	04-10-06
CHECK	H GREEN	04-10-06
DRAWN	A BELCHS	04-10-06
STRESS	H GOPRING	04-10-06
ADVNTG	J BRODRICK	04-10-06

SEE SEPARATE PARTS LIST FOR PARTS, APPLICATION AND PARTS STATUS PL96131540

L3 communications Integrated Systems
P.O. BOX 134560
WACO, TEXAS 76715-4560

DWG TITLE
URD MAIN INSULATION PANEL ASSEMBLIES

SIZE E | CAGE CODE 0GCL4 | DWG NO. 96131540
SCALE NOTED | PROJ ENGINEER | SHEET 1 OF 26

PRODUCED FOR USRA UNDER NAS2-97001 FOR THE NATIONAL AERONAUTICS AND SPACE ADMINISTRATION STRATOSPHERIC OBSERVATORY FOR INFRARED ASTRONOMY PROJECT AMES RESEARCH CENTER

DWG NO. 96131540 REV 1

CAD(33) KEY CODE: 2

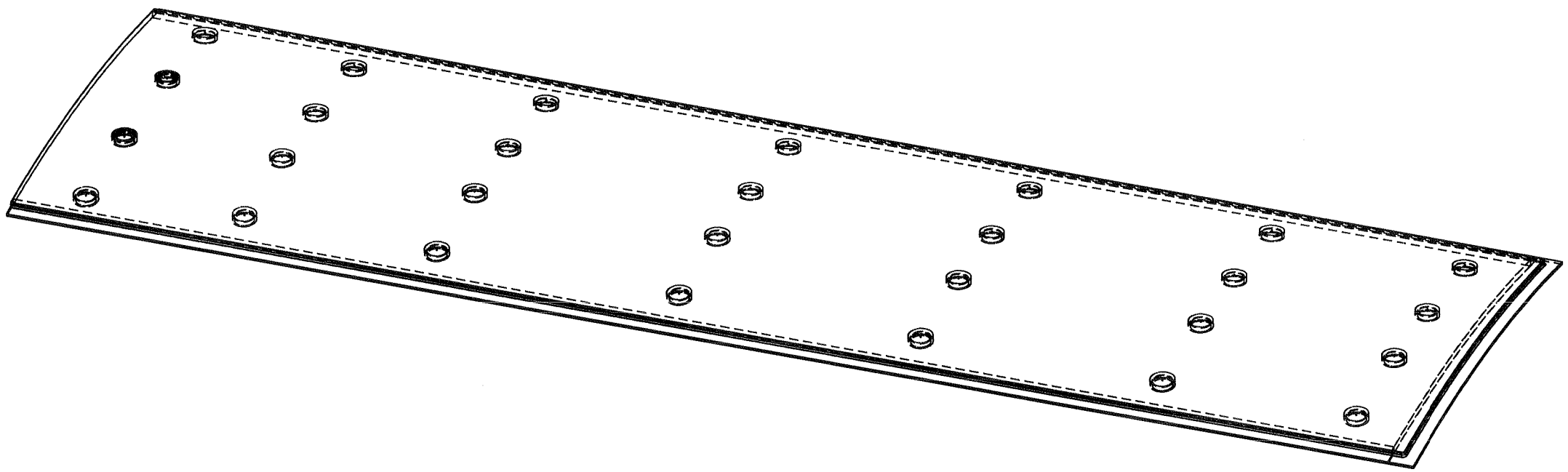

-001
PICTORIAL VIEW

DWG NO. 96131540 SH 2

L3 communications Integrated Systems
P.O. BOX 154580
WACO, TEXAS 76715-4580

SIZE	CAGE CODE	DWG NO.	REV
E	0GCL4	96131540	

SCALE NOTED | Pro/ENGINEER | SHEET 2

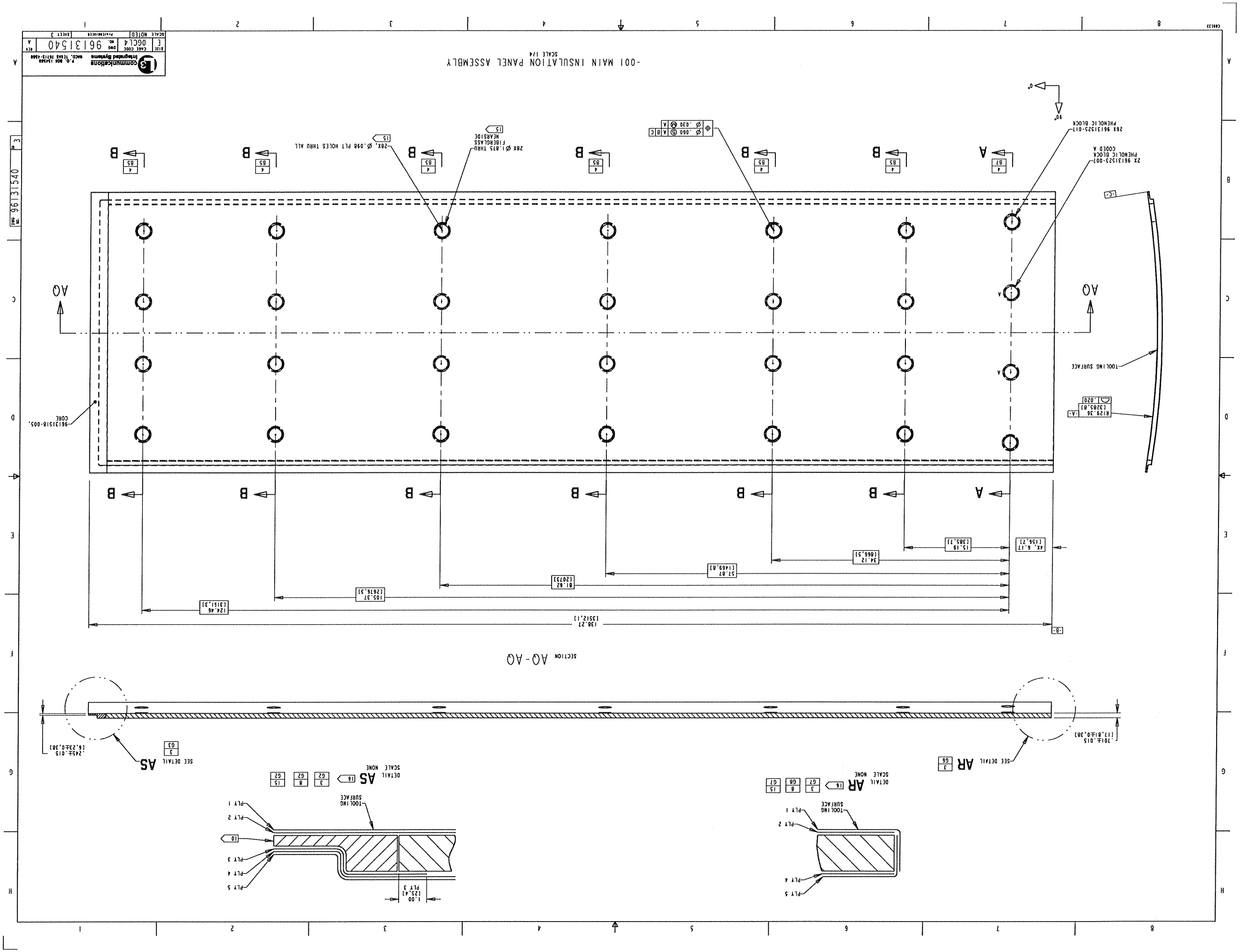
-001 MAIN INSULATION PANEL ASSEMBLY
SCALE 1/4
SECTION AQ-AQ
TOOLING SURFACE
DETAIL AS
DETAIL AR
SCALE NONE
SEE DETAIL AS
SEE DETAIL AR
96131540

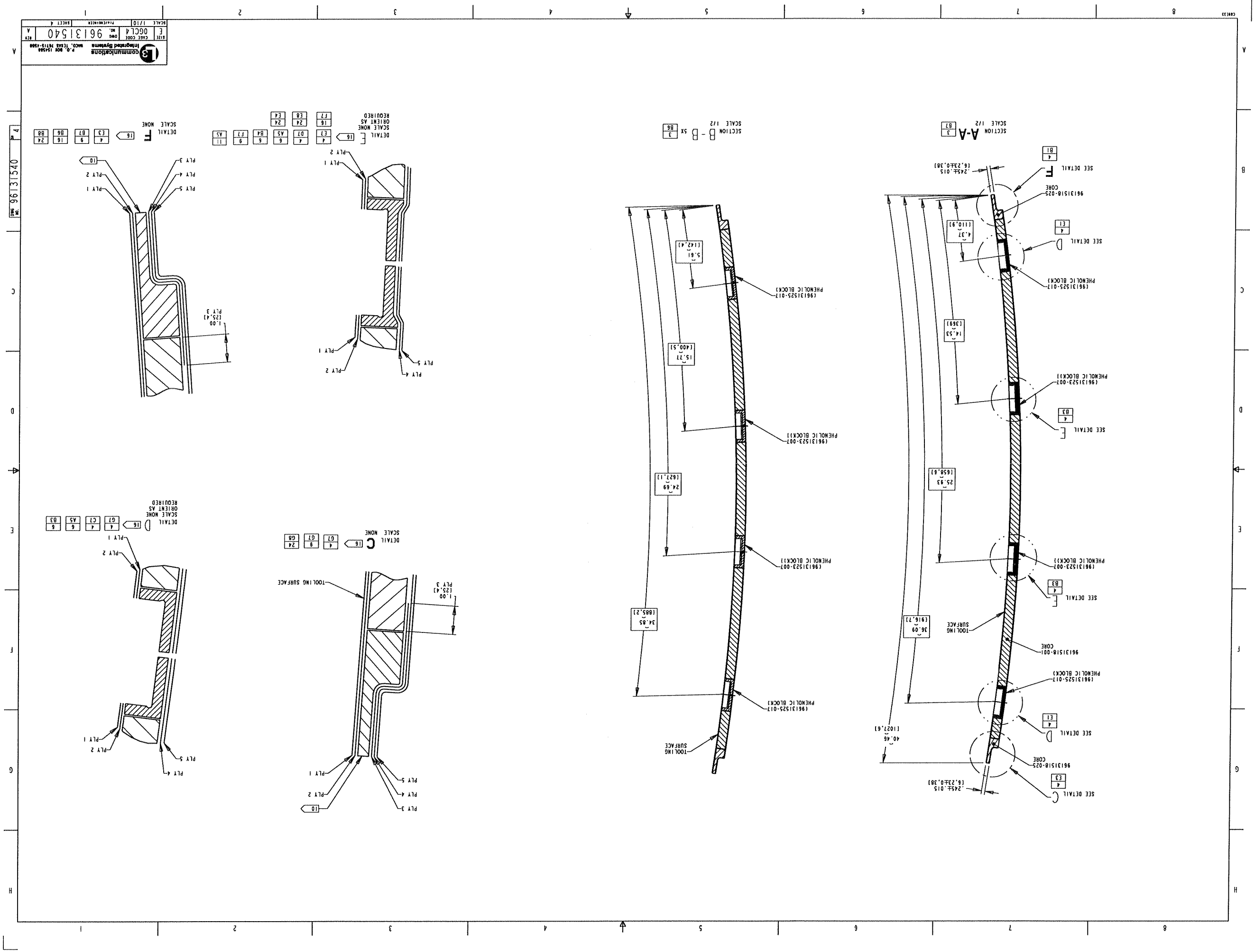

communications
Integrated Systems
P.O. BOX 15456
MACO, TEXAS 76715-4500
SIZE E
CAGE CODE 06CL4
DWG NO. 96131540
REV A
SCALE 1/10
SHEET 4
DWG NO. 96131540
SHEET 4
DETAIL F
SCALE NONE
DETAIL E
SCALE NONE ORIENT AS REQUIRED
DETAIL D
SCALE NONE ORIENT AS REQUIRED
DETAIL C
SCALE NONE
SECTION B - B
SCALE 1/2
SECTION A-A
SCALE 1/2
TOOLING SURFACE
PHENOLIC BLOCK)
SEE DETAIL F
SEE DETAIL D
SEE DETAIL E
SEE DETAIL C

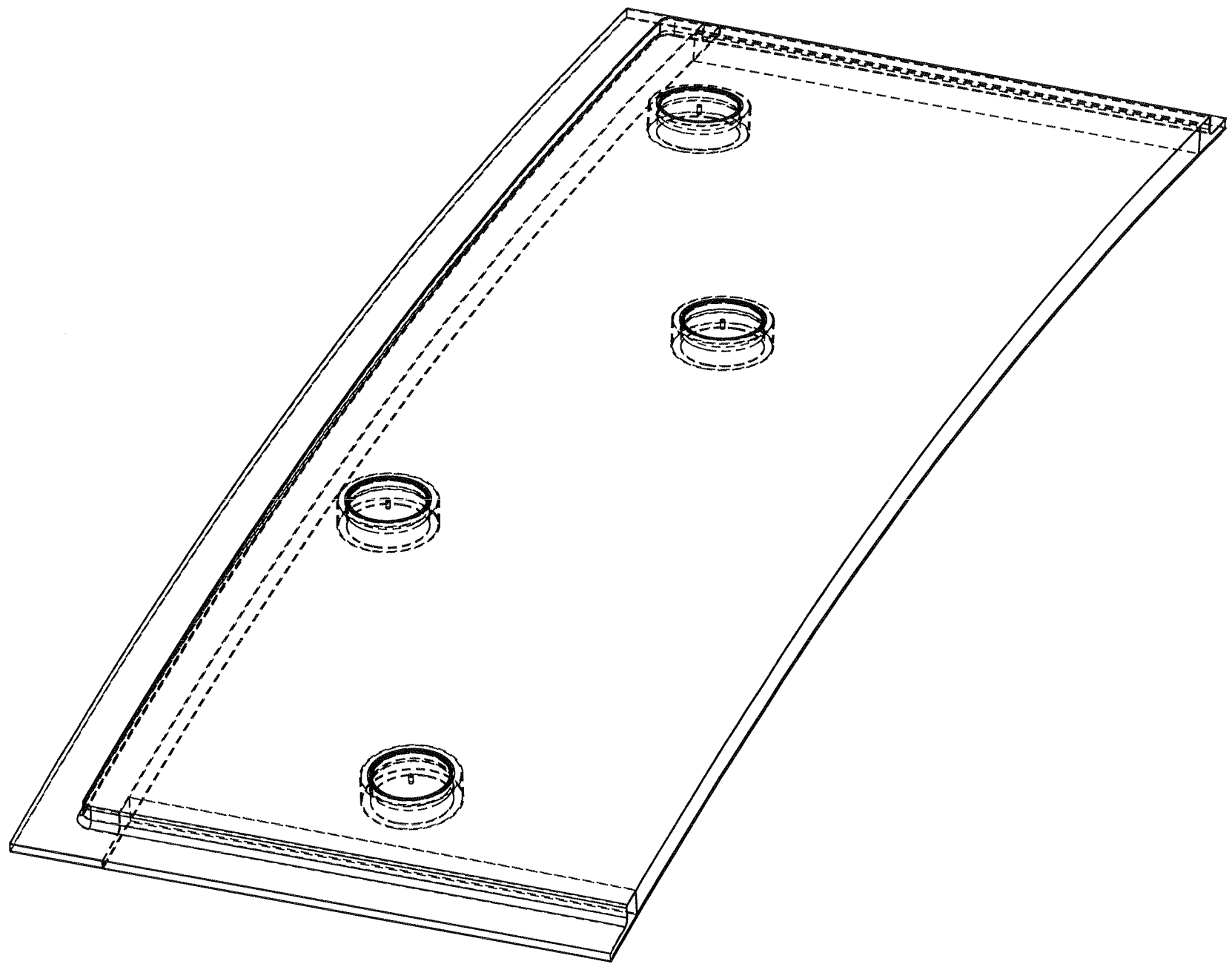

-003
PICTORIAL VIEW

L3 communications Integrated Systems
P.O. BOX 154580
WACO, TEXAS 76715-4580

SIZE	CAGE CODE	DWG NO.	REV
E	0GCL4	96131540	

SCALE NOTED | Pre/ENGINEER | SHEET 5

DWG NO. 96131540 SH 5

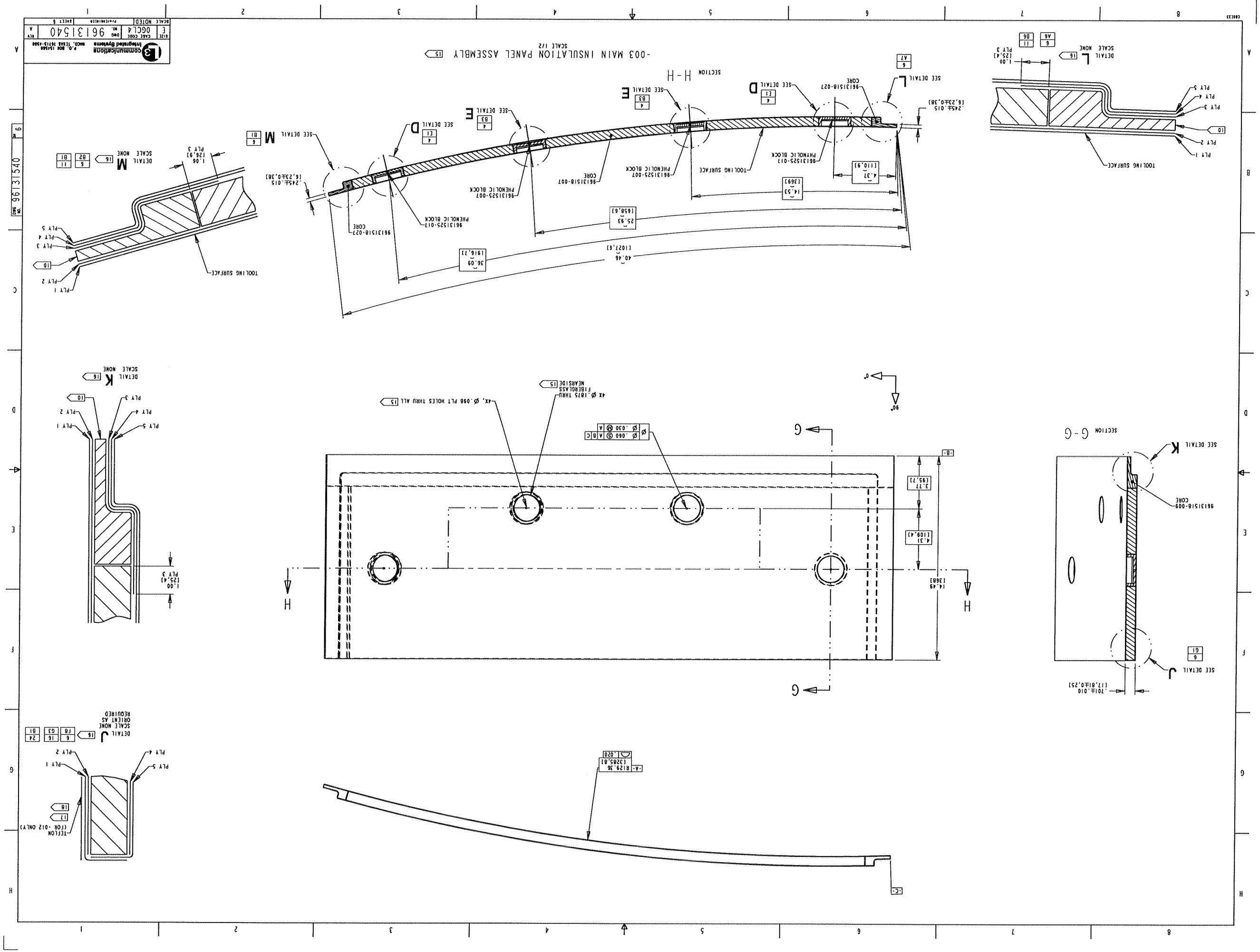

-003 MAIN INSULATION PANEL ASSEMBLY
SCALE 1/2
SECTION H-H
SECTION G-G
DETAIL M
DETAIL L
DETAIL K
DETAIL J
SCALE NONE
TOOLING SURFACE
SEE DETAIL
96131540

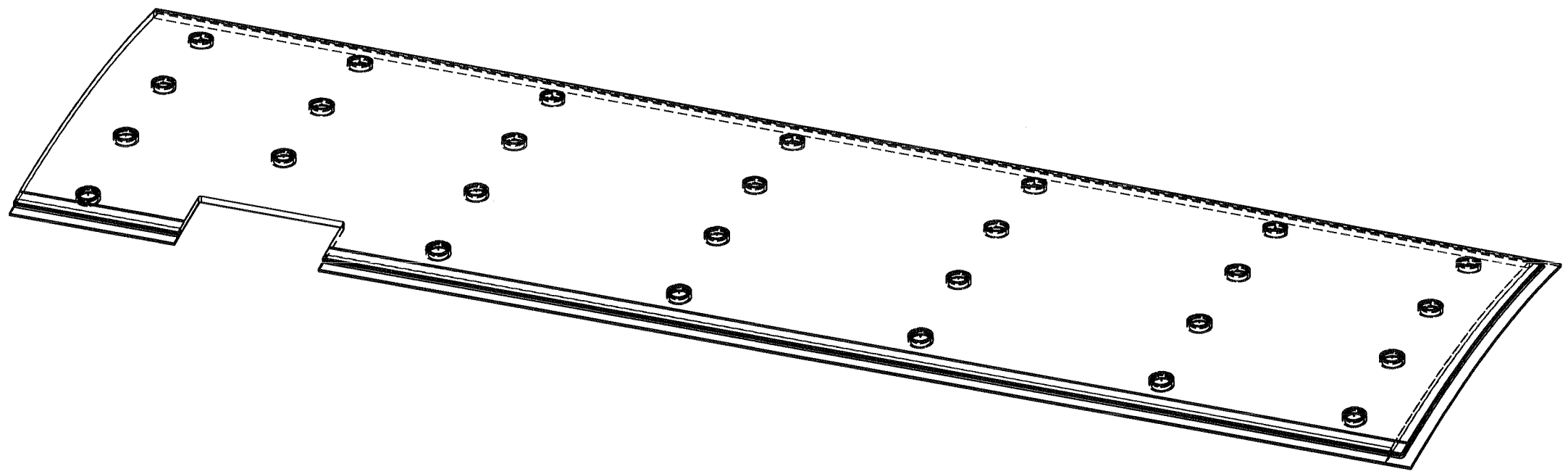

-005
PICTORIAL VIEW

L3 communications Integrated Systems
P.O. BOX 134580
WACO, TEXAS 76715-4580

SIZE	CAGE CODE	DWG NO.	REV
E	0GCL4	96131540	A

SCALE NOTED | PROJECT ENGINEER | SHEET 7

DWG NO. 96131540 SH 7

C09E33

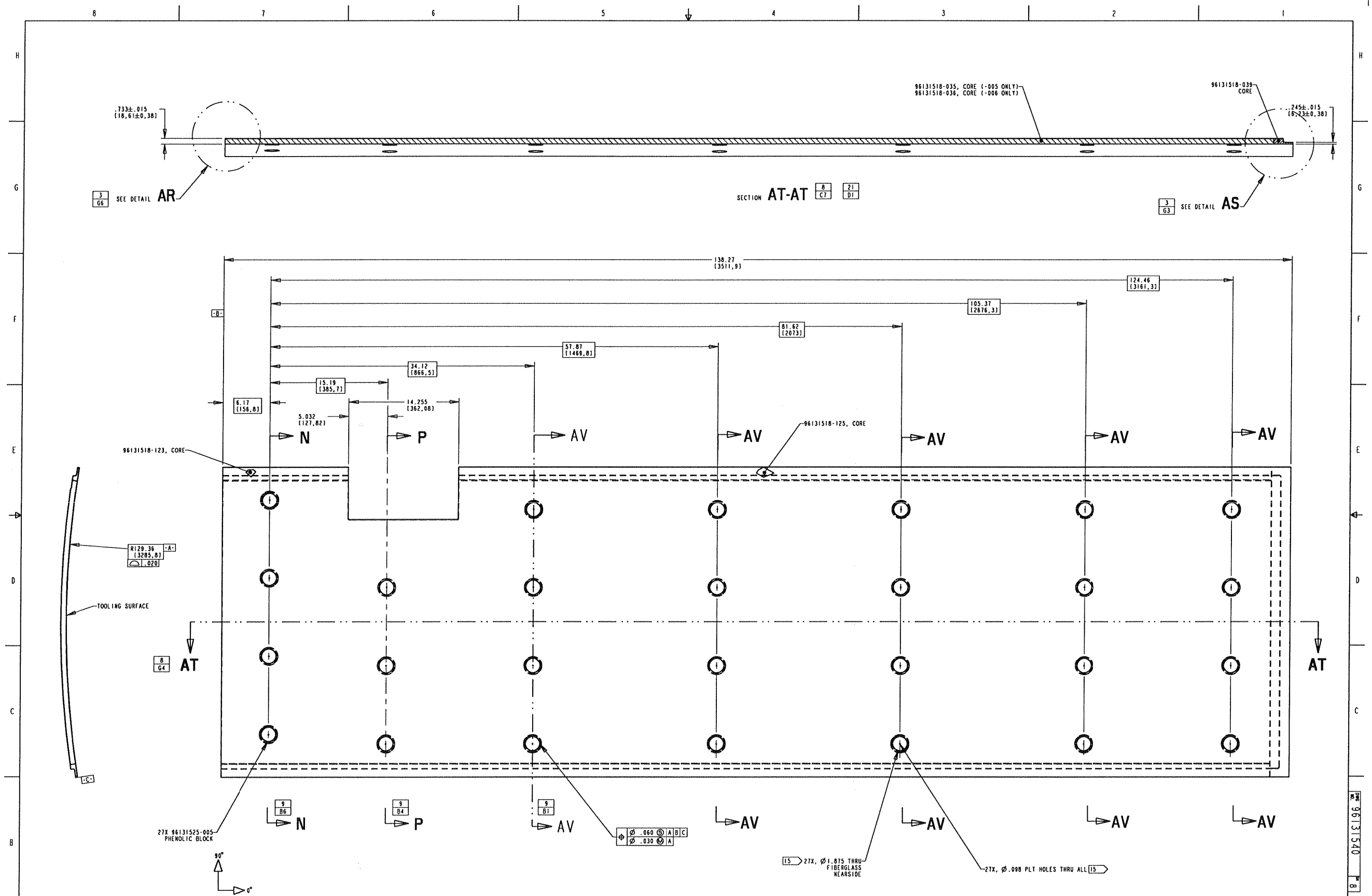

-005 MAIN INSULATION PANEL ASSEMBLY
SCALE 1/4

L3 communications Integrated Systems
P.O. BOX 15:560
WACO, TEXAS 76715-1560

SIZE	CAGE CODE	DWG NO.	REV
E	0GCL4	96131540	A

SCALE NOTED | Pro/ENGINEER | SHEET 8

DWG 96131540 SH 8

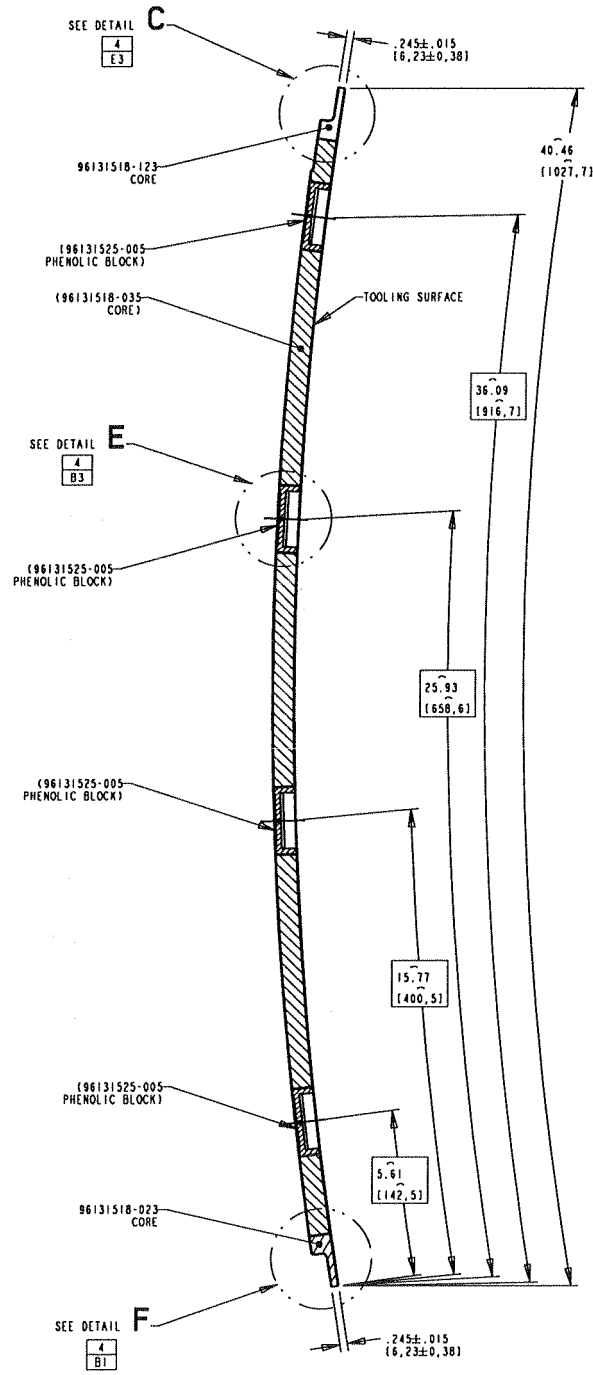

SECTION N-N 8 B7
SCALE 1/2

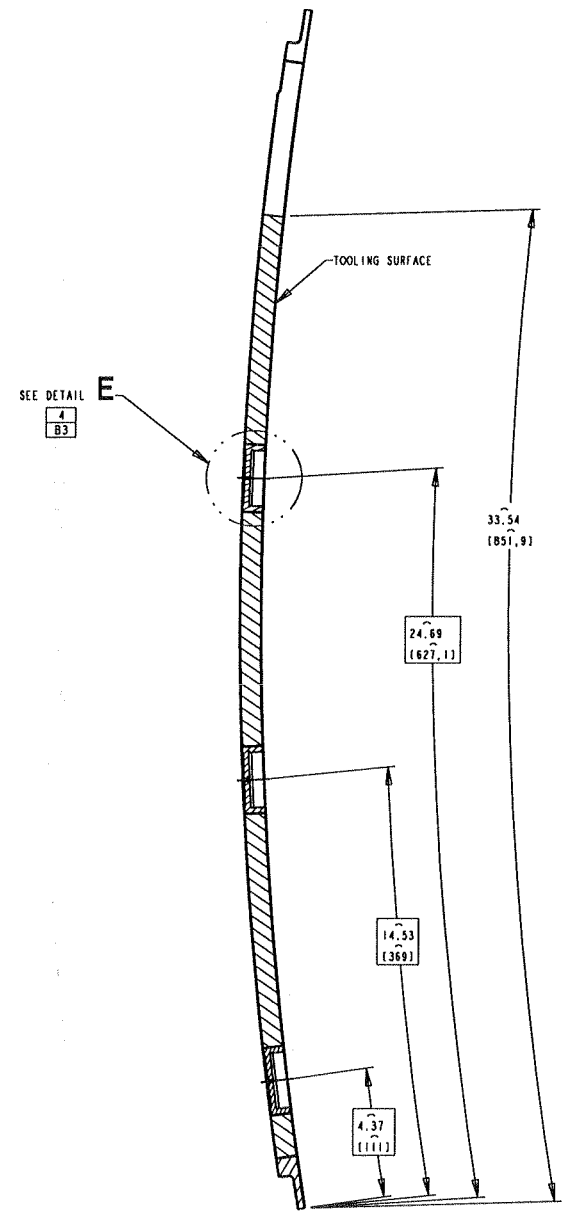

SECTION P-P 6 B6
SCALE 1/2

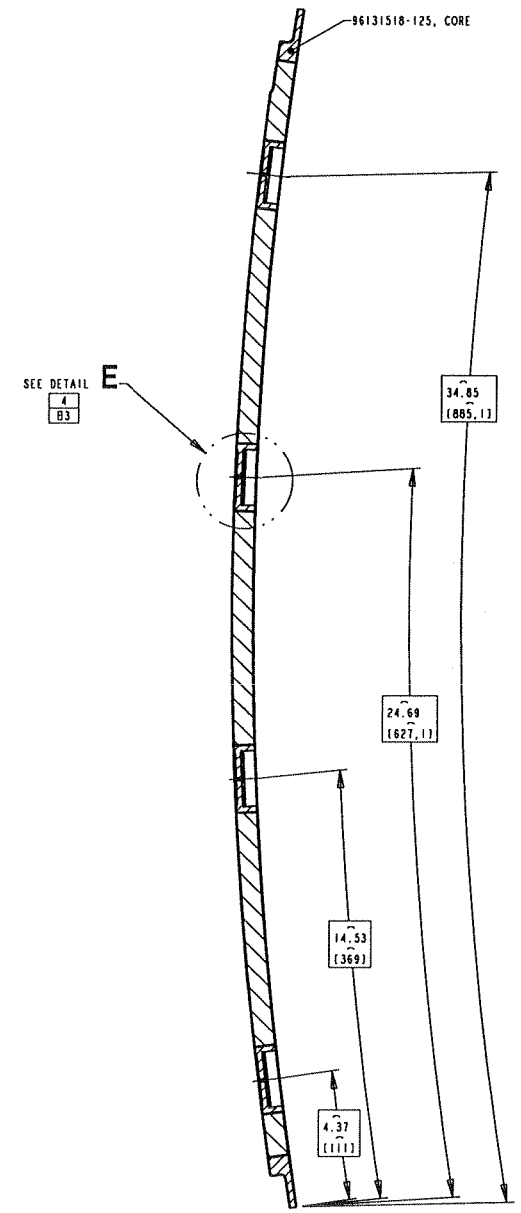

SECTION AV-AV 6 B4
SCALE 1/2

L3 communications Integrated Systems
P.O. BOX 1341560
WACO, TEXAS 76715-1500

SIZE	CAGE CODE	DWG NO.	REV
E	06CL4	96131540	A

SCALE NOTED | Pro/ENGINEER | SHEET 9

96131540 9

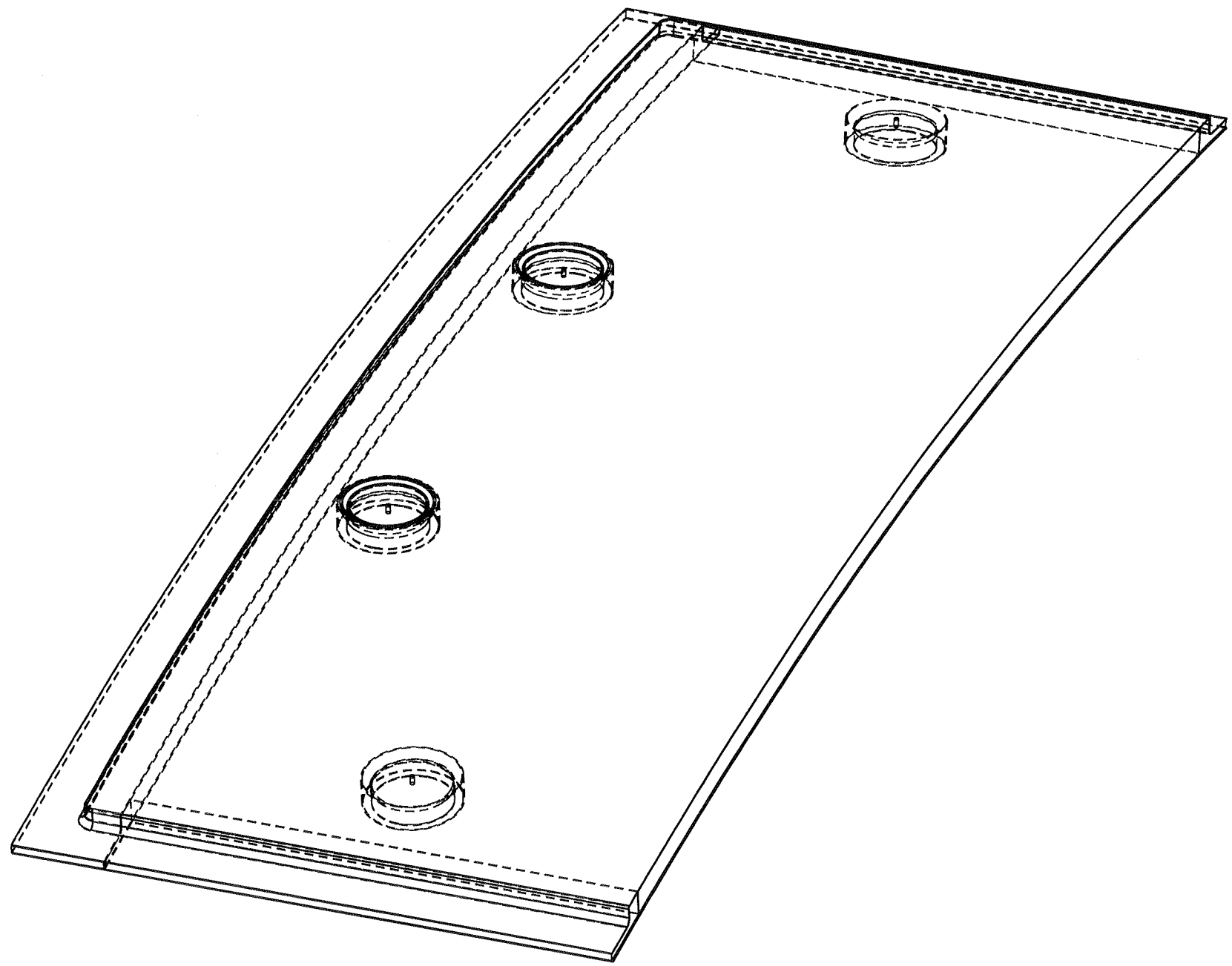

-007
PICTORIAL VIEW

L3 communications Integrated Systems
P.O. BOX 134580
WACO, TEXAS 76715-4580

SIZE	CAGE CODE	DWG NO.	REV
E	0GCL4	96131540	

SCALE NOTED | Pro/ENGINEER | SHEET 10

DWG NO. 96131540 SH 10

CAD(33)

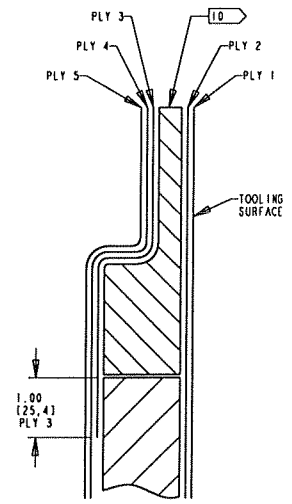

DETAIL S 16 11 E7 13 C7
SCALE NONE

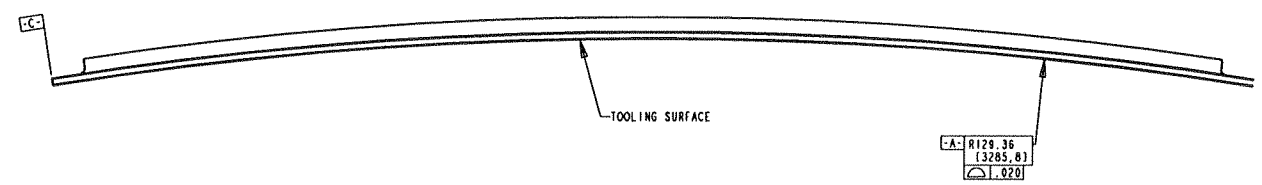

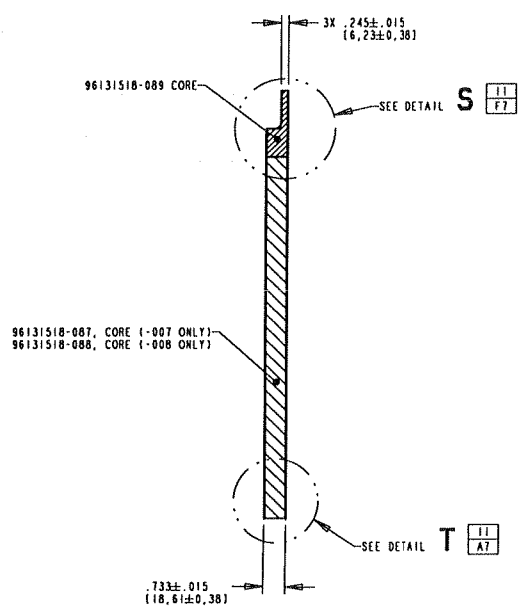

SECTION Q-Q
SCALE 1/2

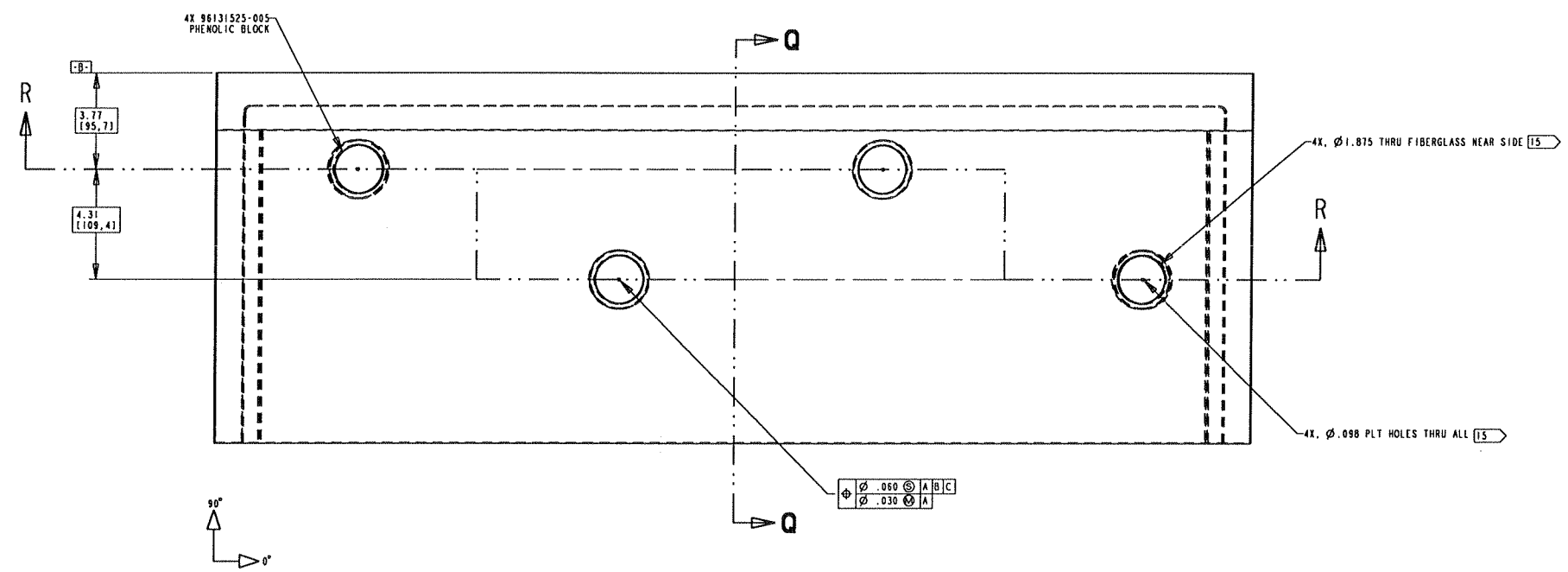

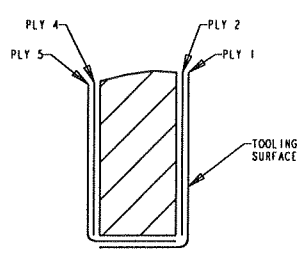

DETAIL T 16 11 C7 13 A8
SCALE NONE

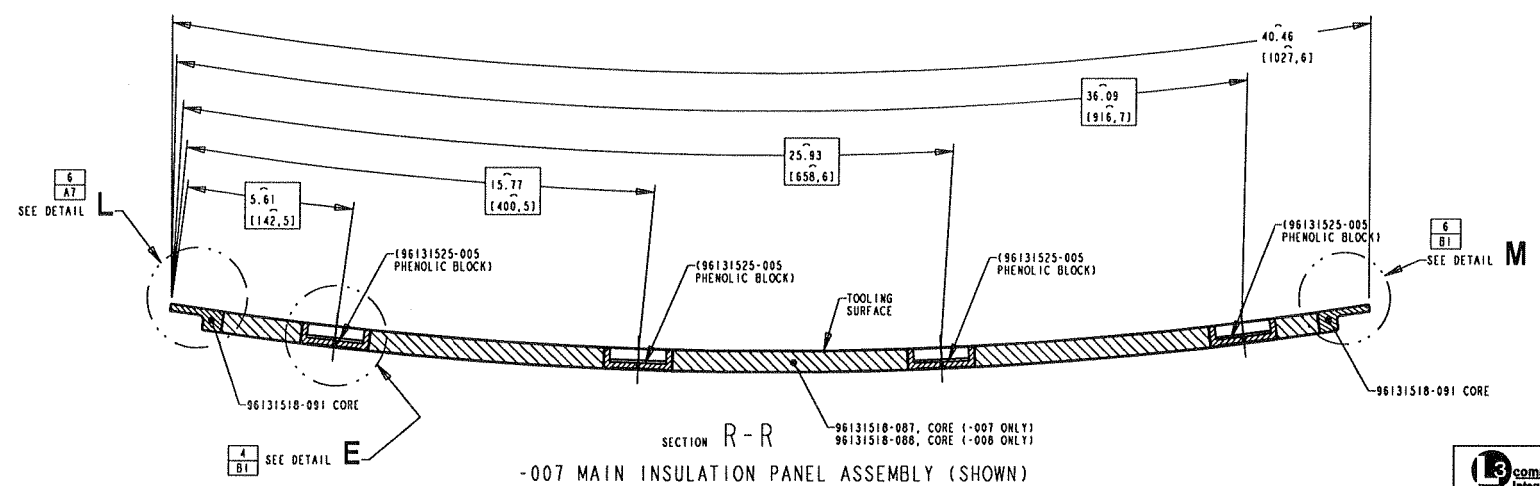

SECTION R-R

-007 MAIN INSULATION PANEL ASSEMBLY (SHOWN)
-008 MAIN INSULATION PANEL ASSEMBLY (OPP)
SCALE 1/2

L3 communications Integrated Systems
P.O. BOX 134580
WACO, TEXAS 76715-4580

SIZE	CAGE CODE	DWG NO.	REV
E	0GCL4	96131540	A
SCALE NOTED		Prod/ENGINEER	SHEET 11

96131540 REV A

C48(33)

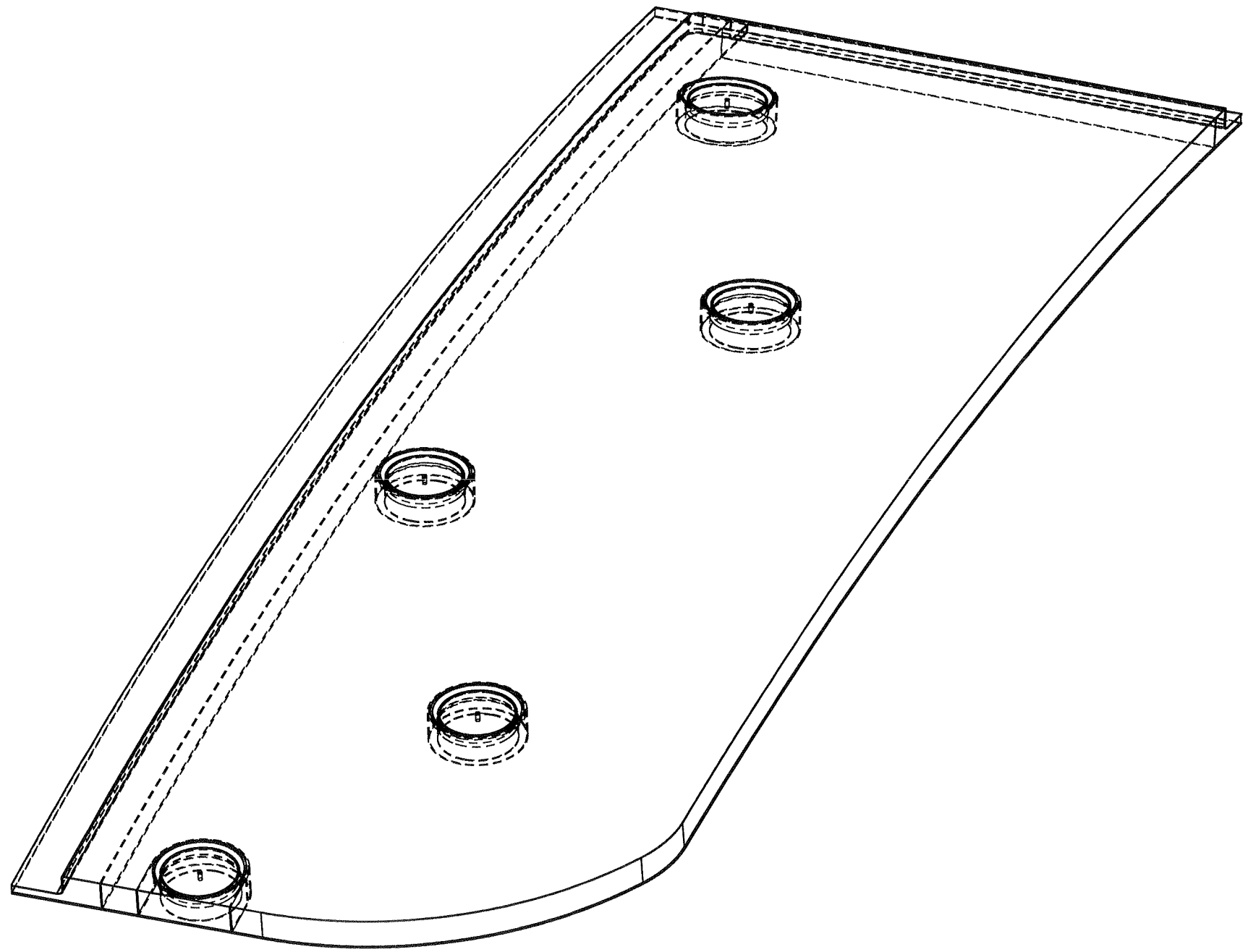

-009
PICTORIAL VIEW

L3 communications Integrated Systems
P.O. BOX 154500
WACO, TEXAS 76715-4500

SIZE	CAGE CODE	DWG NO.	REV
E	06CL4	96131540	

SCALE NOTED | Pro/ENGINEER | SHEET 12

DWG NO. 96131540 REV 12

C96C33

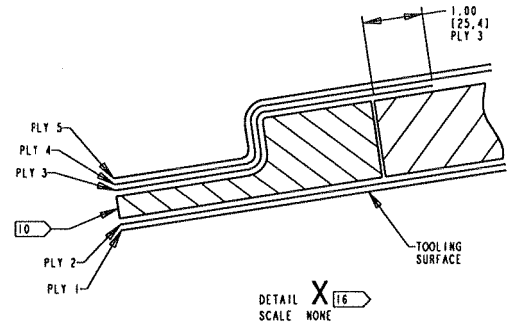

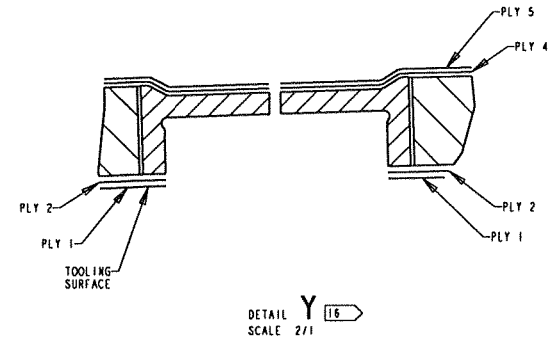

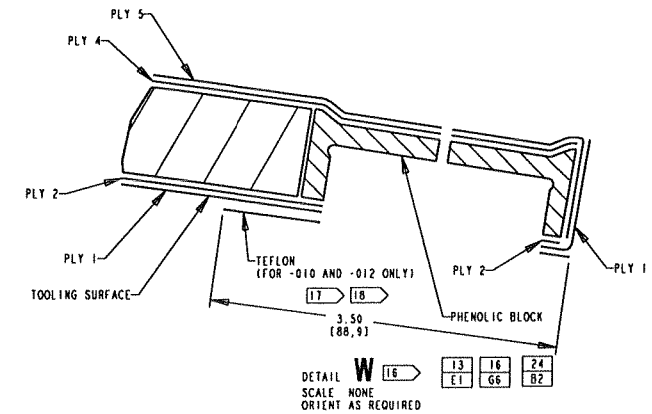

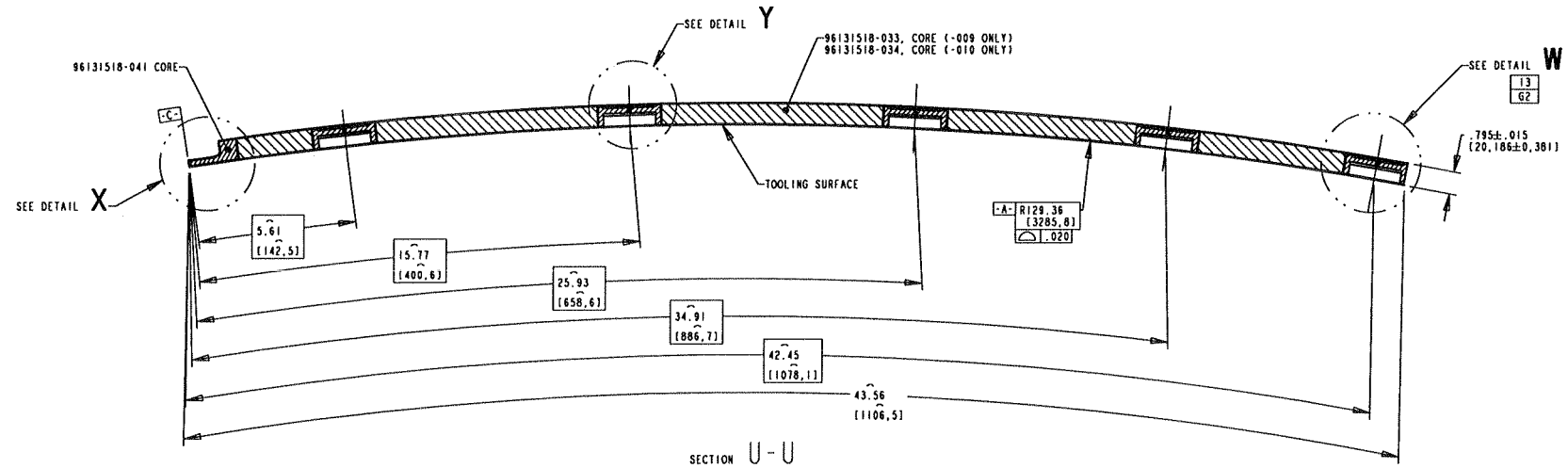

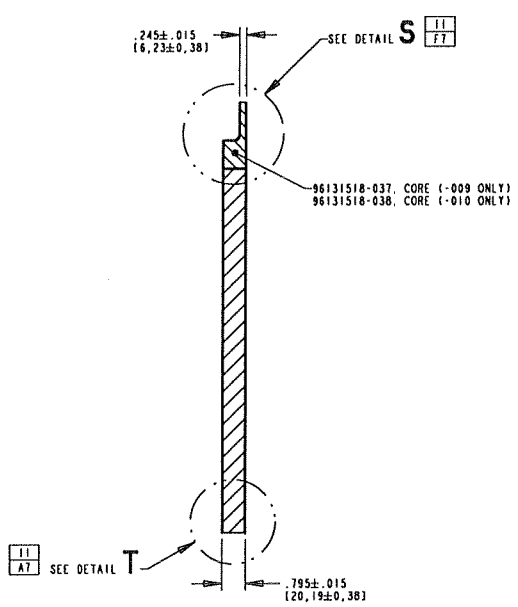

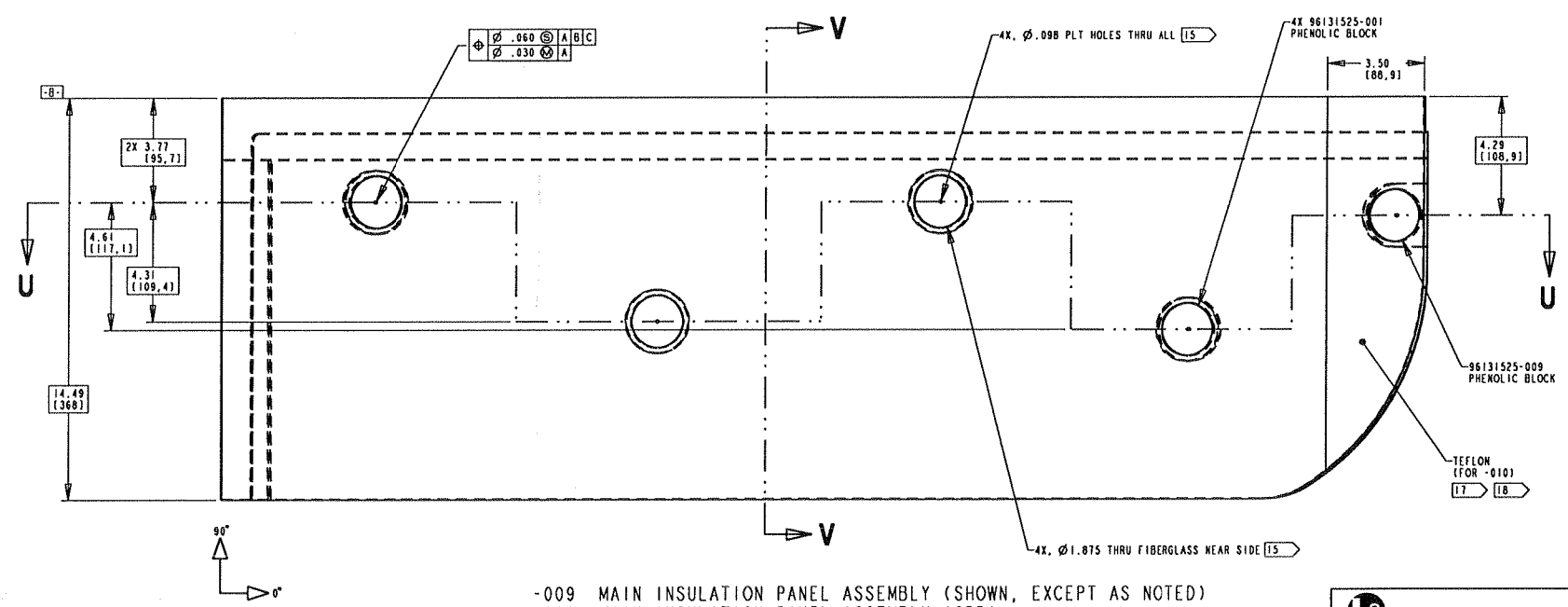

-009 MAIN INSULATION PANEL ASSEMBLY (SHOWN, EXCEPT AS NOTED)
-010 MAIN INSULATION PANEL ASSEMBLY (OPP)
SCALE 1/2

L3 communications Integrated Systems
P.O. BOX 155500
WACO, TEXAS 76715-4500

SIZE	CAGE CODE	DWG NO.	REV
E	0GCL4	96131540	A

SCALE NOTED | Pro/ENGINEER | SHEET 13

96131540 13

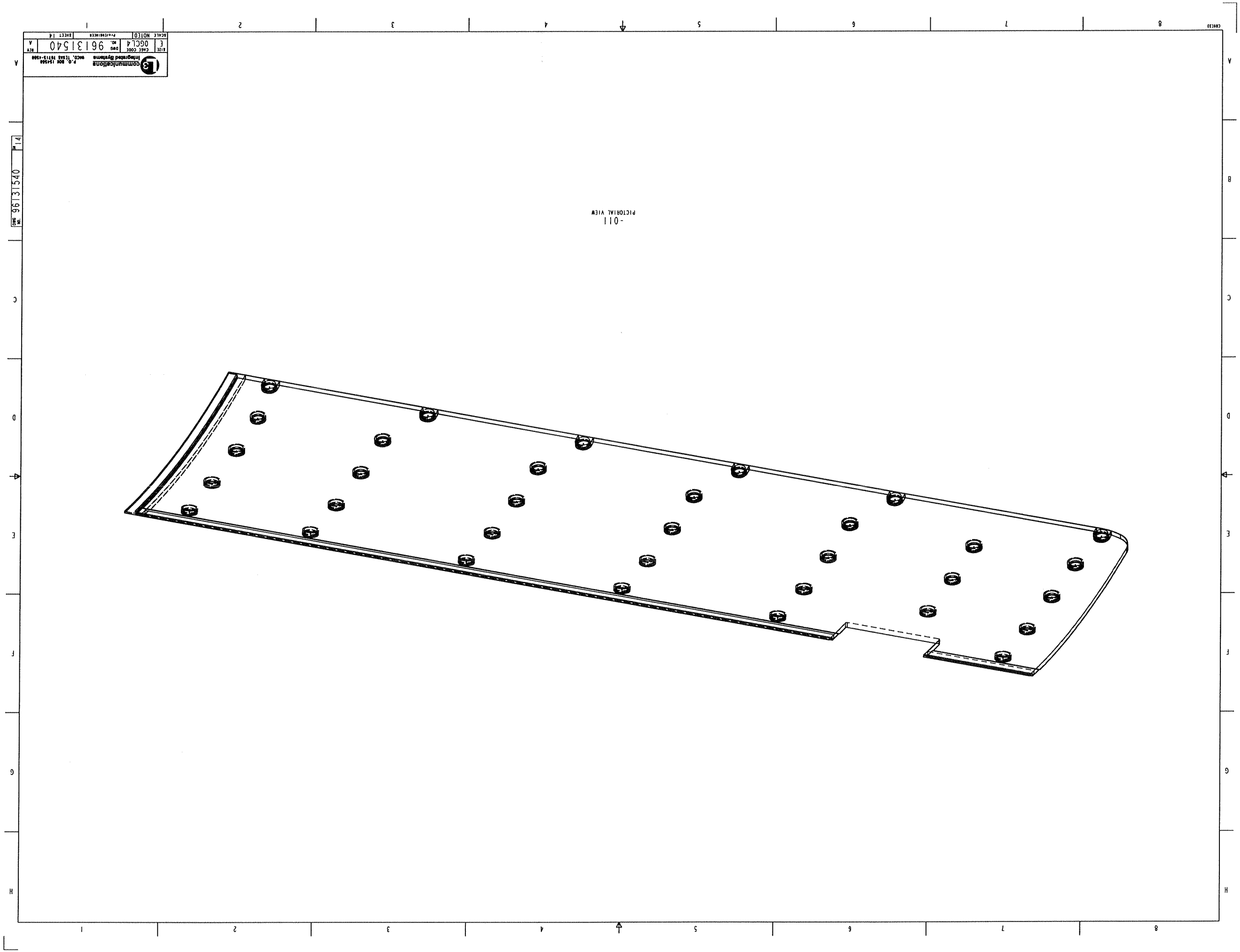

-011
PICTORIAL VIEW
communications
Integrated Systems
P.O. BOX 154560
MACO, TEXAS 76715-4560
SIZE E
CAGE CODE 06CL4
DWG NO. 96131540
REV A
SCALE NOTED
SHEET 14
DWG NO. 96131540
SH 14

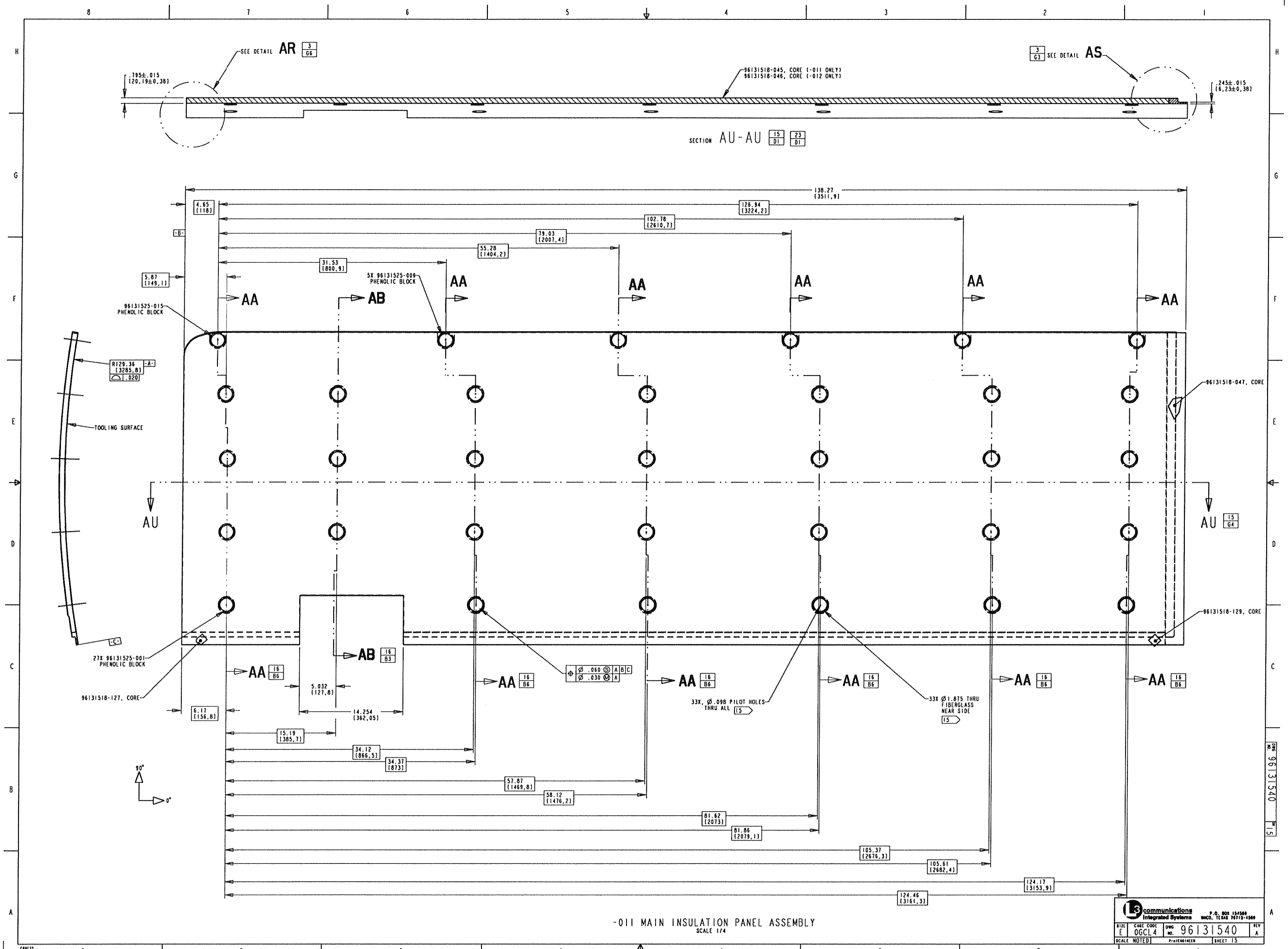

-011 MAIN INSULATION PANEL ASSEMBLY
SCALE 1/4

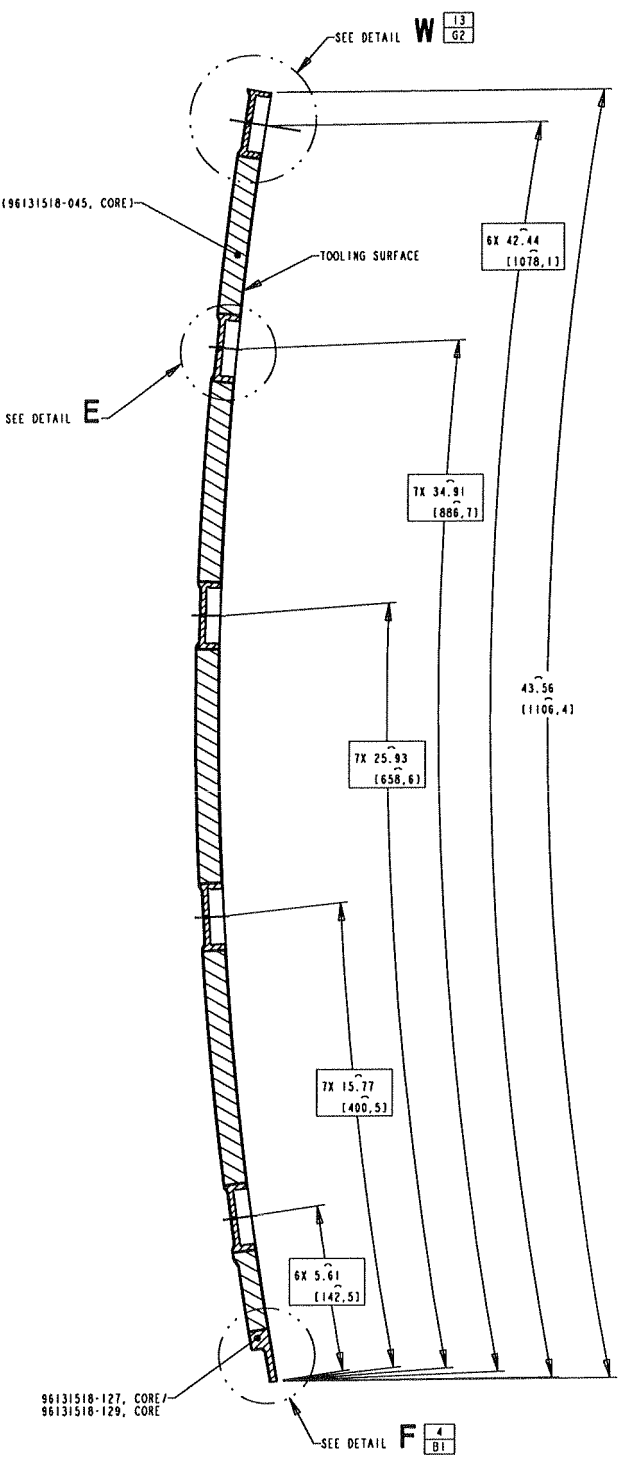

SECTION AA-AA 15 B7
SCALE 1/2

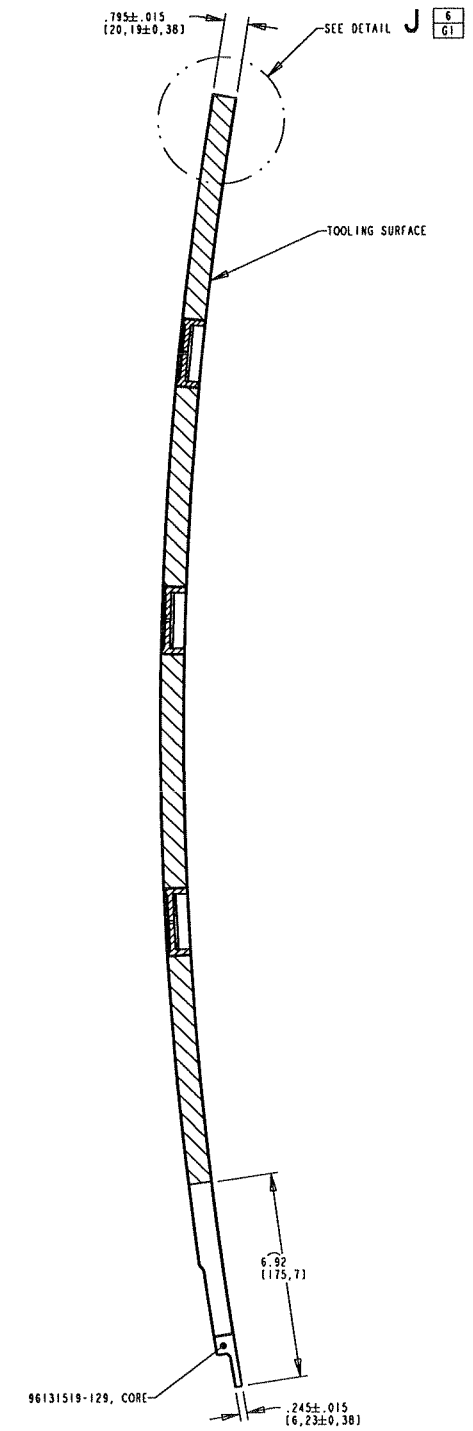

SECTION AB-AB 15 B6
SCALE 1/2

L3 communications Integrated Systems
P.O. BOX 154500
WACO, TEXAS 76715-4500

SIZE	CAGE CODE	DWG NO.	REV
E	0GCL4	96131540	A

SCALE NOTED | Pro/ENGINEER | SHEET 16

DWG 96131540 SH 16

C09C33

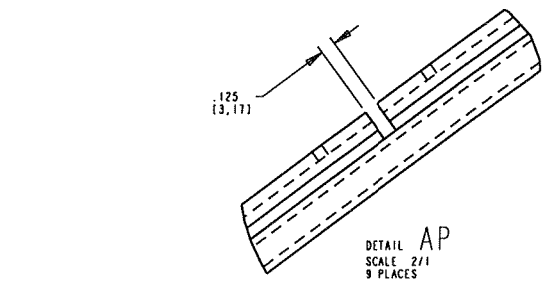

DETAIL AP
SCALE 2/1
9 PLACES
13

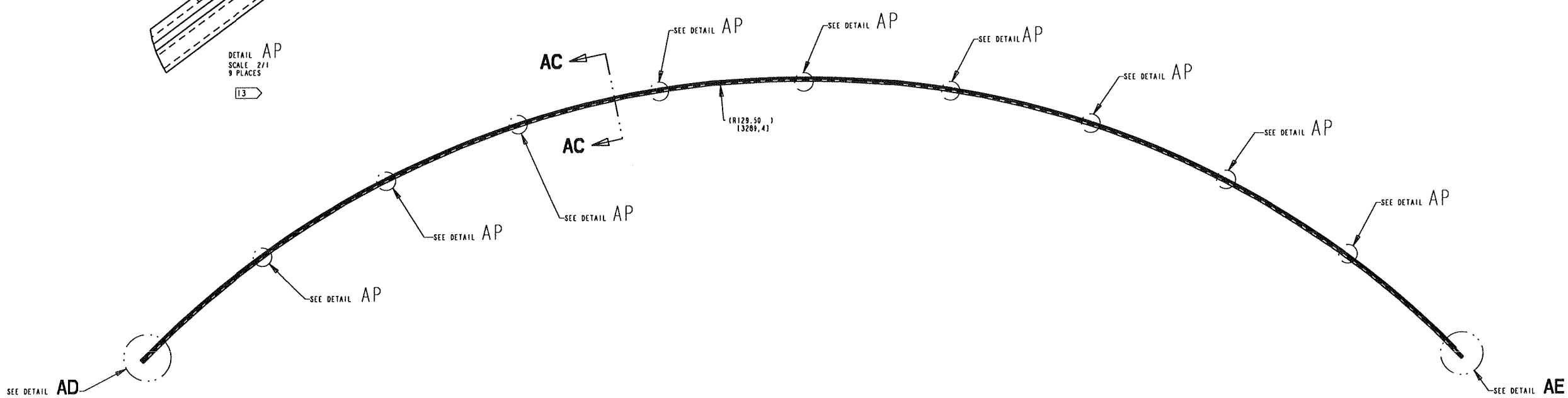

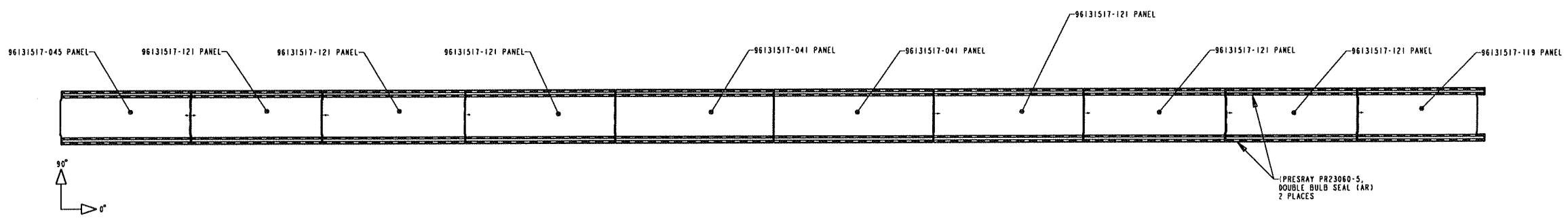

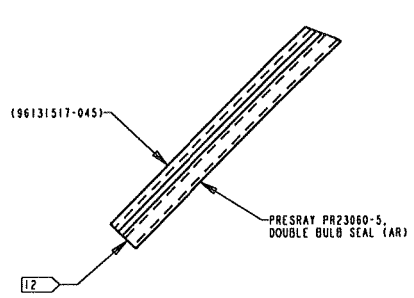

DETAIL AD
SCALE 1/1

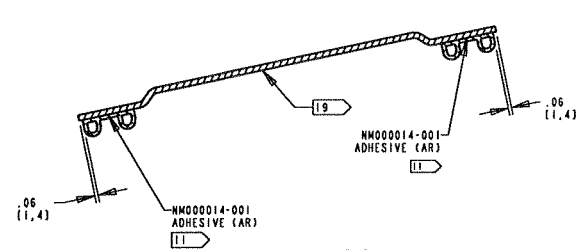

SECTION AC-AC
SCALE 1/1

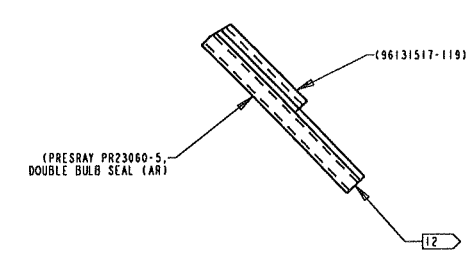

DETAIL AE
SCALE 1/1

-013 LINER PANEL ASSY
SCALE 3/16

L3 communications Integrated Systems
P.O. BOX 154580
WACO, TEXAS 76715-4580

SIZE	CAGE CODE	DWG NO.	REV
E	0GCL4	96131540	A

SCALE NOTED | PROJ ENGINEER | SHEET 17

DWG 96131540 SH 17

CAD(33)

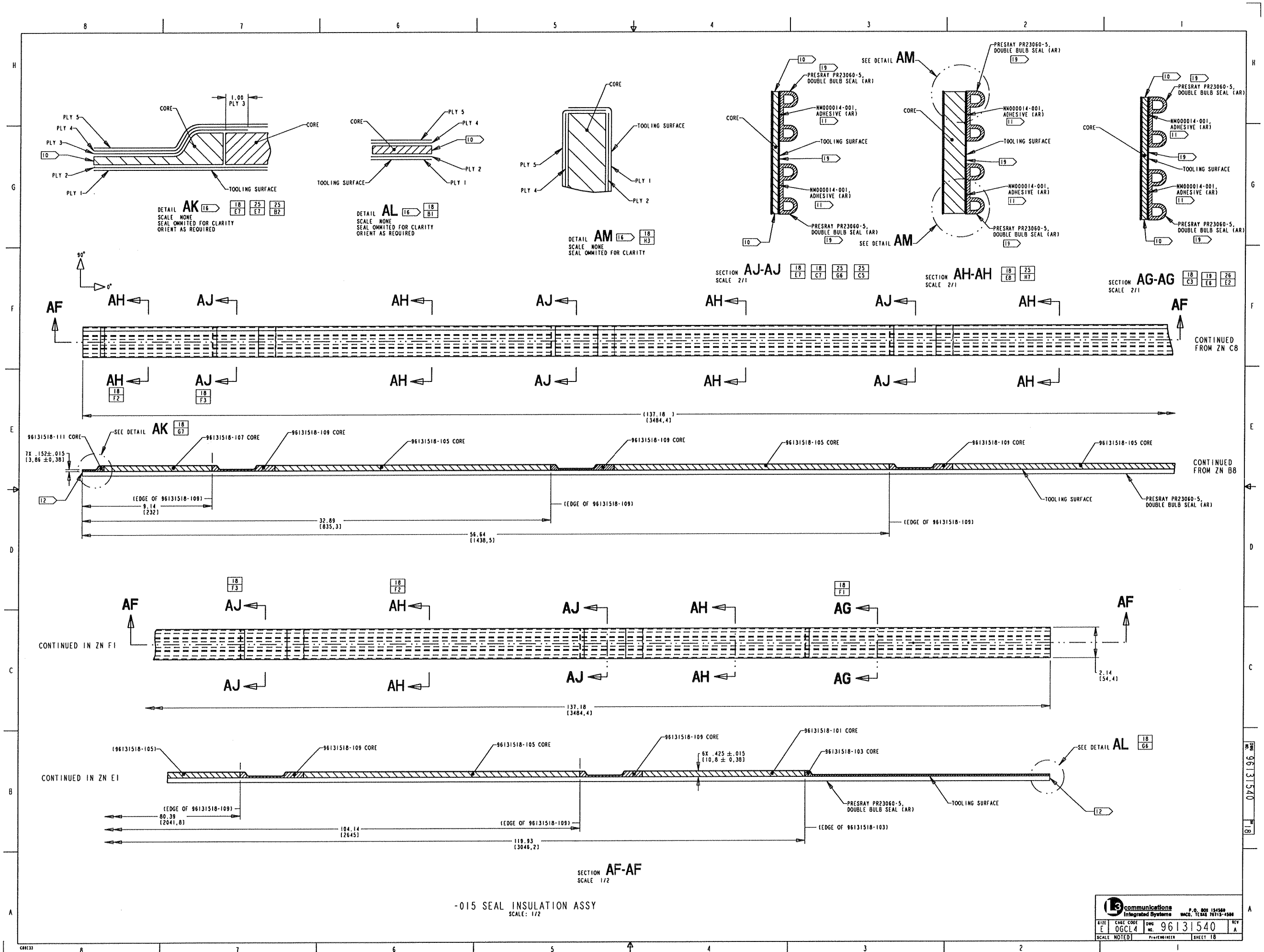

DETAIL AK
SCALE NONE
SEAL OMMITED FOR CLARITY
ORIENT AS REQUIRED
DETAIL AL
SCALE NONE
SEAL OMMITED FOR CLARITY
ORIENT AS REQUIRED
DETAIL AM
SCALE NONE
SEAL OMMITED FOR CLARITY
SECTION AJ-AJ
SCALE 2/1
SECTION AH-AH
SCALE 2/1
SECTION AG-AG
SCALE 2/1
CONTINUED FROM ZN C8
CONTINUED FROM ZN B8
CONTINUED IN ZN F1
CONTINUED IN ZN E1
SEE DETAIL AK
SEE DETAIL AL
SECTION AF-AF
SCALE 1/2
-015 SEAL INSULATION ASSY
SCALE: 1/2
L3 communications Integrated Systems
SIZE E
CAGE CODE 0GCL4
DWG NO. 96131540
REV A
SCALE NOTED
SHEET 18

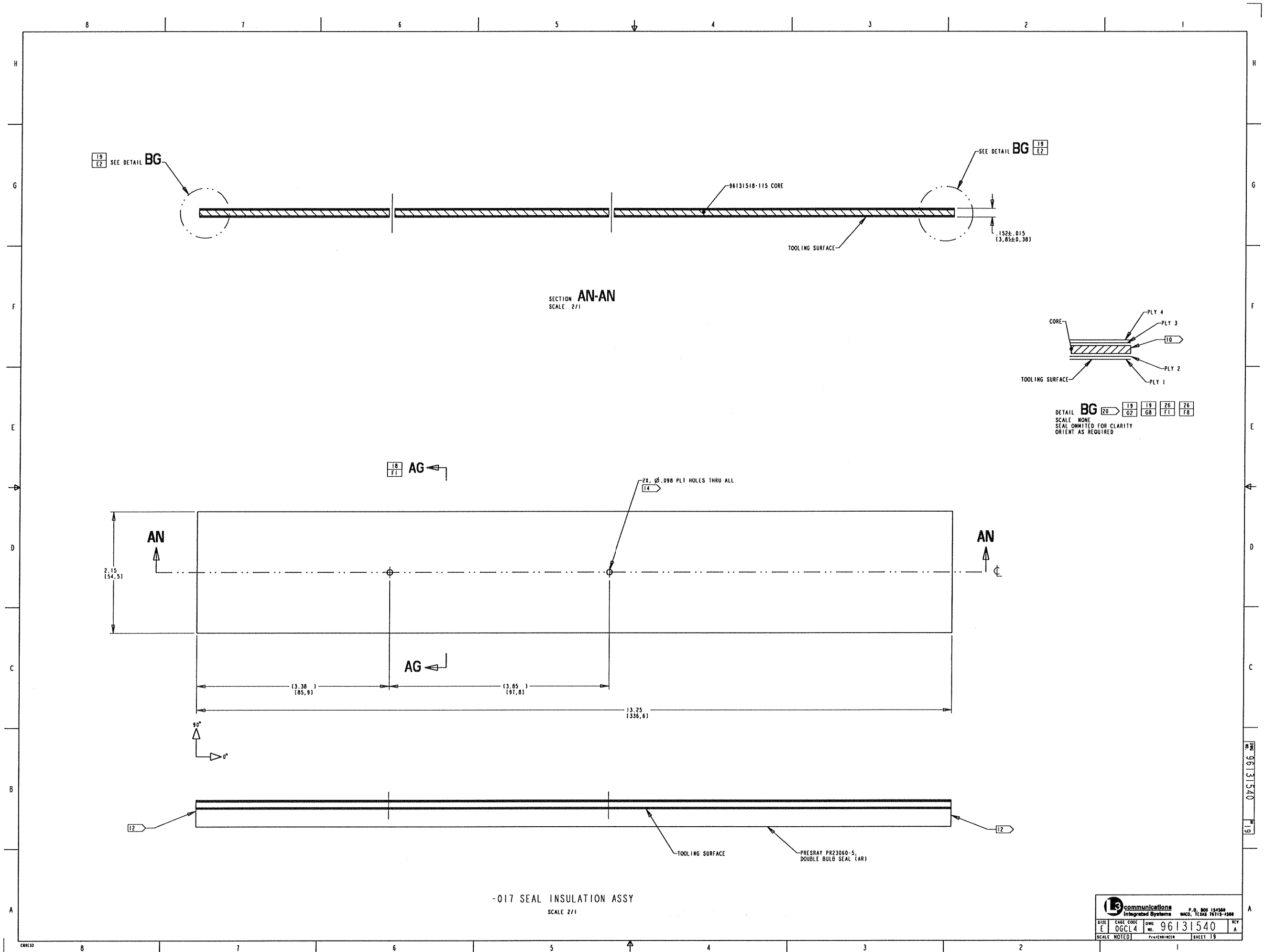

SEE DETAIL BG
96131518-115 CORE
TOOLING SURFACE
.152±.015
[3,85±0,38]
SECTION AN-AN
SCALE 2/1
CORE
PLY 4
PLY 3
PLY 2
PLY 1
TOOLING SURFACE
DETAIL BG
SCALE NONE
SEAL OMMITED FOR CLARITY
ORIENT AS REQUIRED
AG
2X, Ø.098 PLT HOLES THRU ALL
AN
2.15
[54,5]
(3.38)
[85,9]
(3.85)
[97,8]
13.25
[336,6]
90°
0°
TOOLING SURFACE
PRESRAY PR23060-5,
DOUBLE BULB SEAL (AR)
-017 SEAL INSULATION ASSY
SCALE 2/1
communications
Integrated Systems
P.O. BOX 154560
WACO, TEXAS 76715-4560
SIZE E
CAGE CODE 0GCL4
DWG NO. 96131540
REV A
SCALE NOTED
SHEET 19

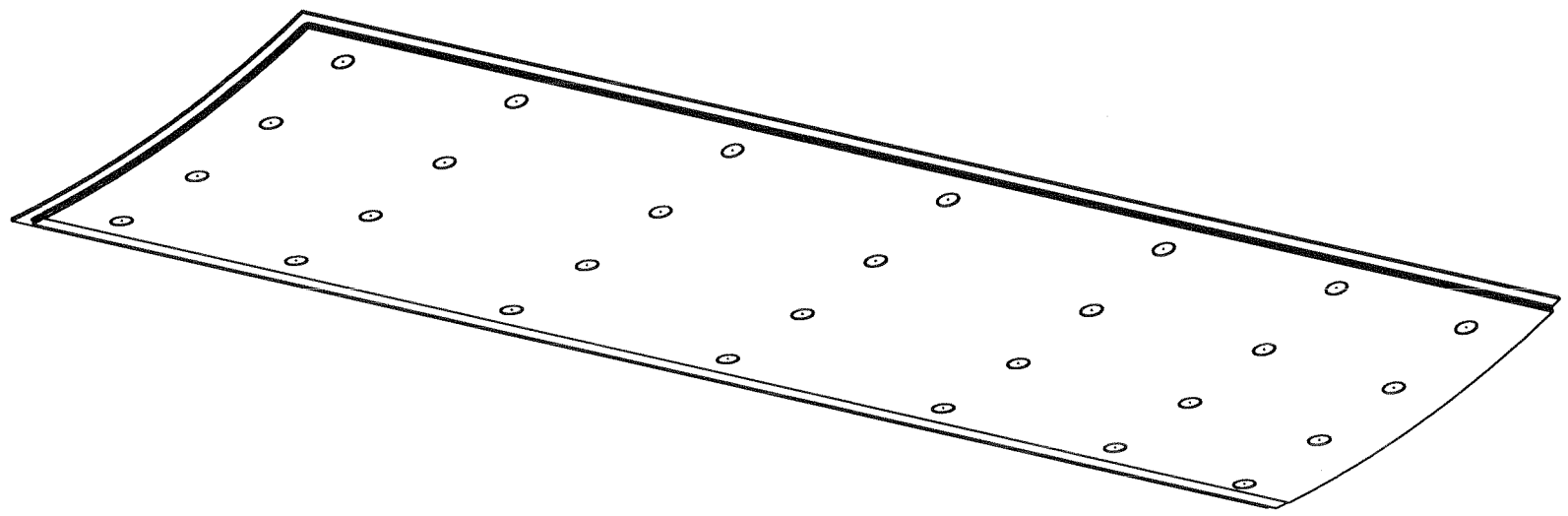

Communications Integrated Systems
P.O. BOX 15456
MACO, TEXAS 76113-4500

SIZE	CAGE CODE	DWG NO.	REV
E	06CL4	96131540	A
SCALE NOTED		PROFESSIONAL	SHEET 20

DWG NO. 96131540 SH 20

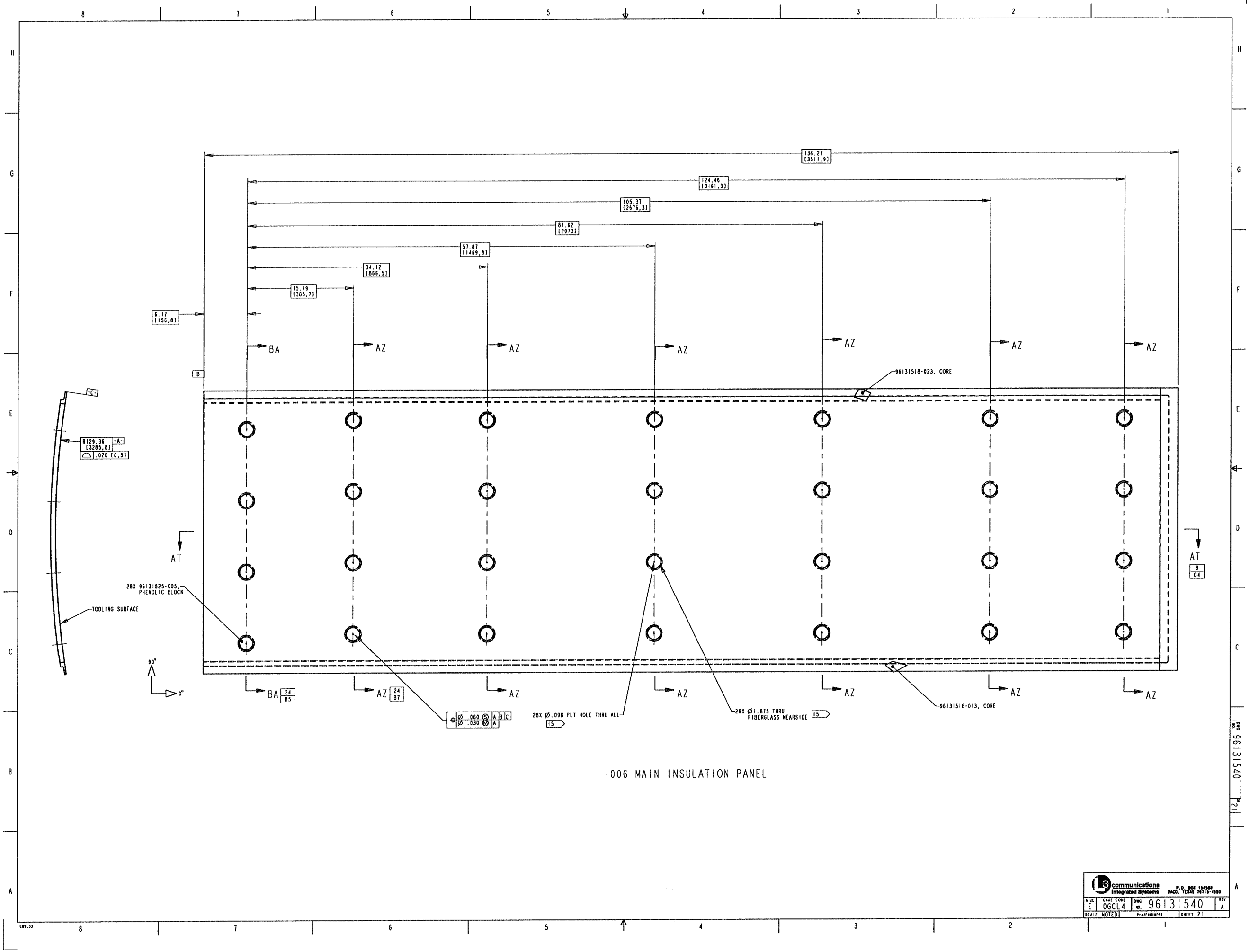
138.27 [3511,9]
124.46 [3161,3]
105.37 [2678,3]
81.62 [2073]
57.87 [1469,8]
34.12 [866,5]
15.19 [385,7]
6.17 [156,8]
BA
AZ
AT
-B-
-C-
-A-
R129.36 [3285,8]
.020 [0,5]
TOOLING SURFACE
28X 96131525-005, PHENOLIC BLOCK
96131518-023, CORE
96131518-013, CORE
28X Ø.098 PLT HOLE THRU ALL
28X Ø1.875 THRU FIBERGLASS NEARSIDE
Ø .060 Ⓜ A B C
Ø .030 Ⓜ A
90°
0°
-006 MAIN INSULATION PANEL
L3 communications Integrated Systems
P.O. BOX 154580 WACO, TEXAS 76715-4580
SIZE E
CAGE CODE 0GCL4
DWG NO. 96131540
REV A
SCALE NOTED
SHEET 21
96131540 #21

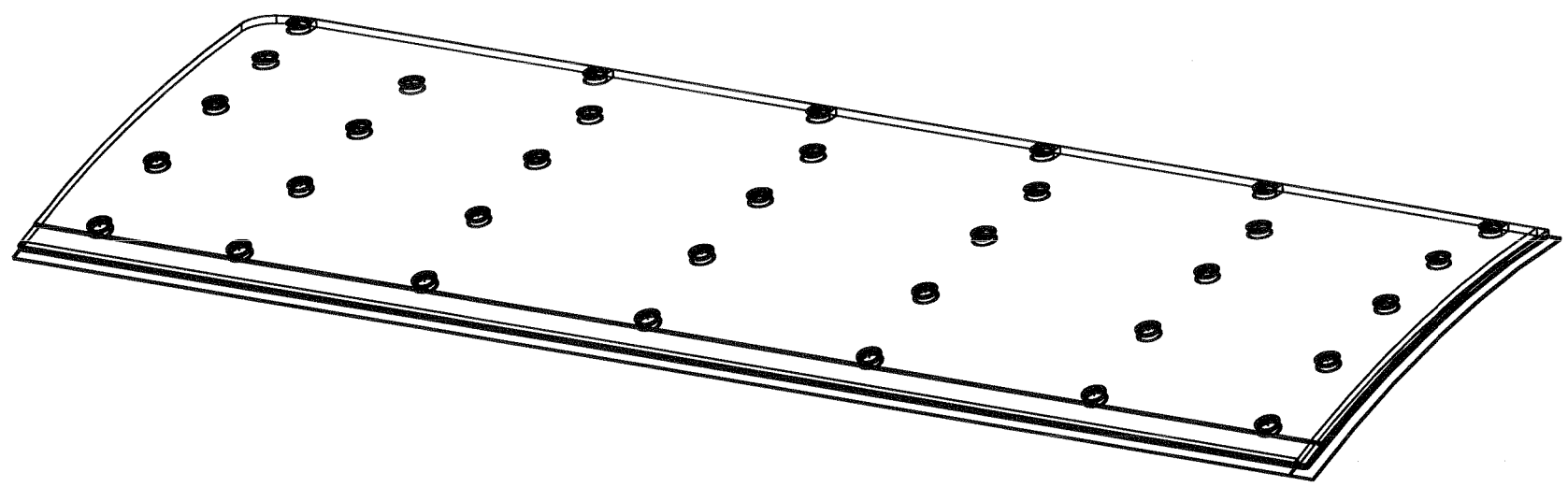

-012
PICTORIAL VIEW

communications Integrated Systems
P.O. BOX 154580
WACO, TEXAS 76715-4580

SIZE	CAGE CODE	DWG NO.	REV
E	0GCL4	96131540	A

SCALE NOTED | Pro/ENGINEER | SHEET 22

DWG NO. 96131540 SH 22

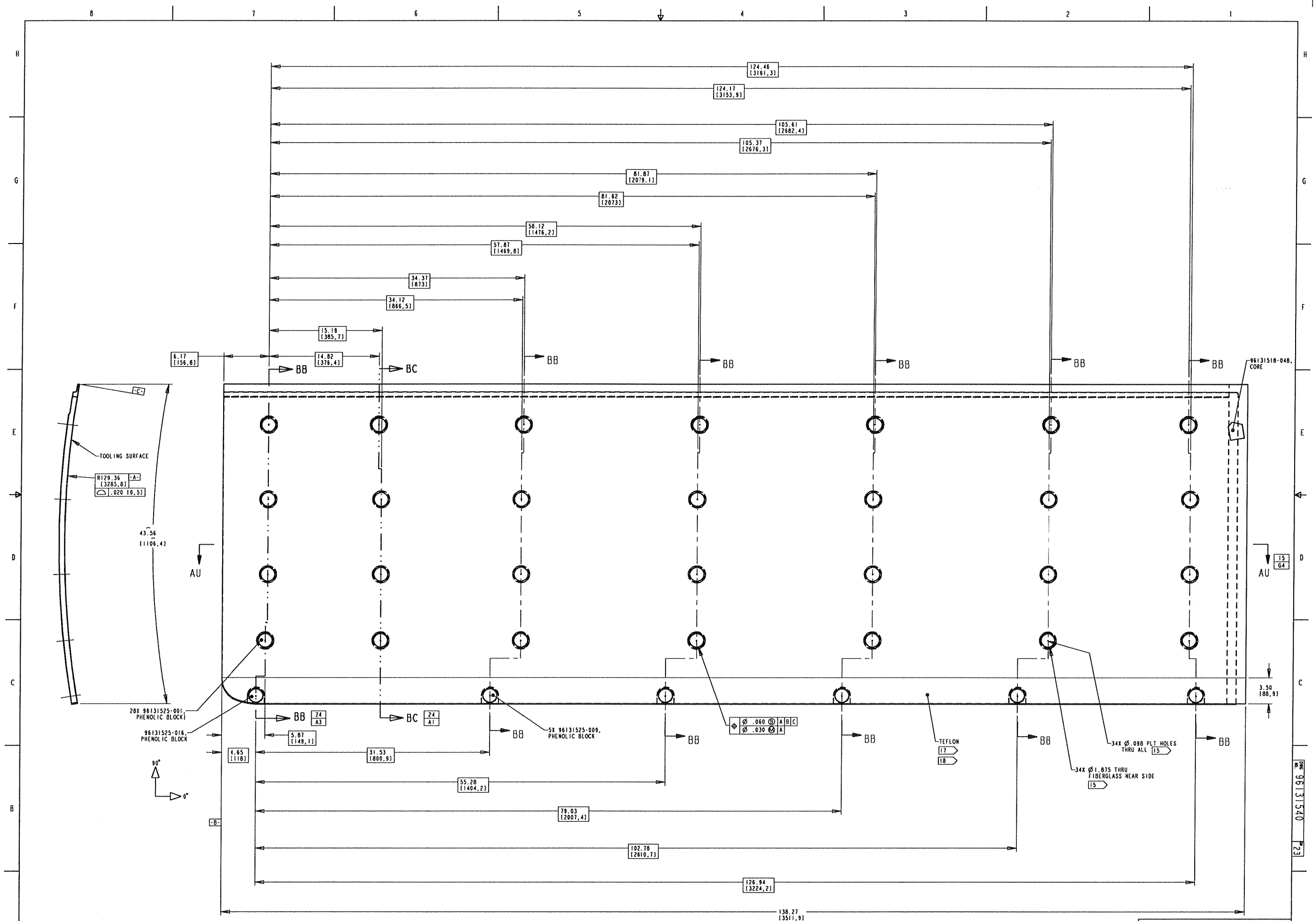

-012 MAIN INSULATION PANEL ASSEMBLY
SCALE 1/4

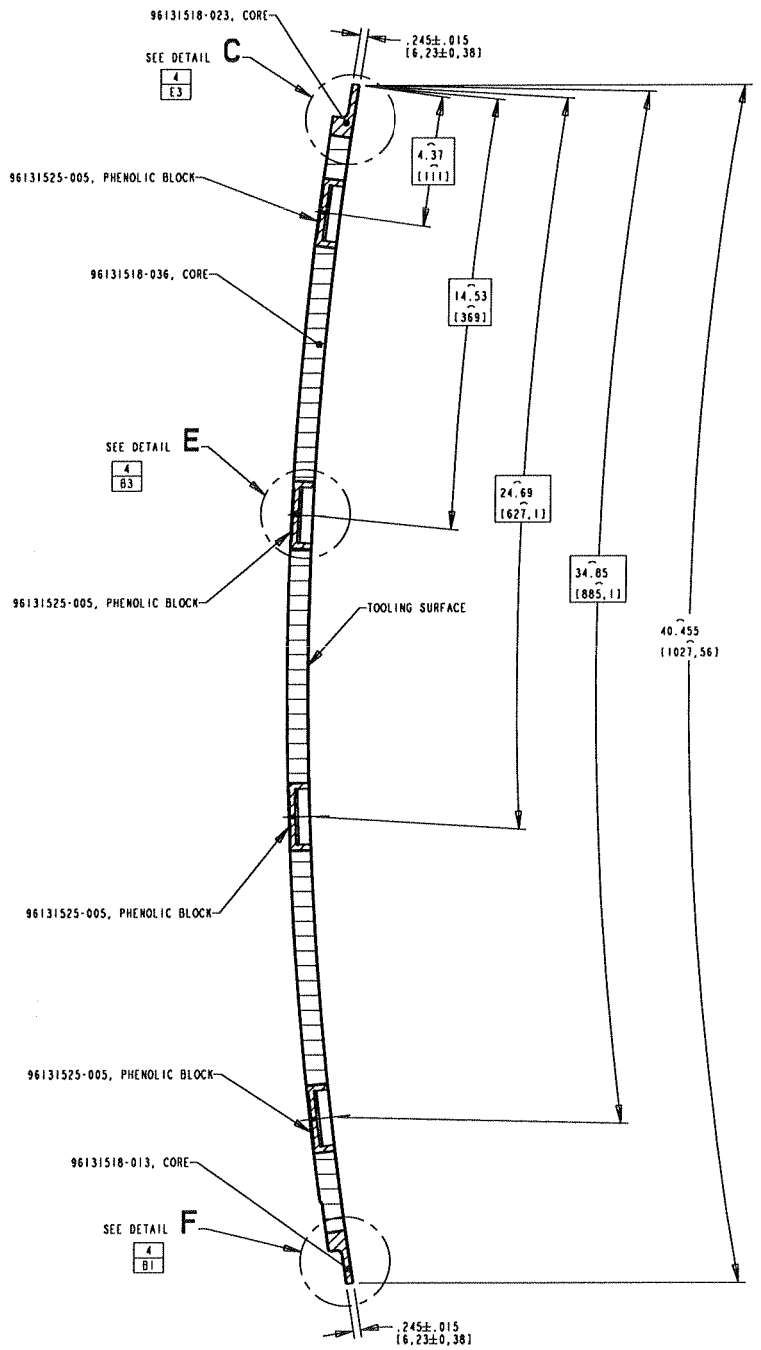

SECTION AZ-AZ 21 C6
SCALE 1/2

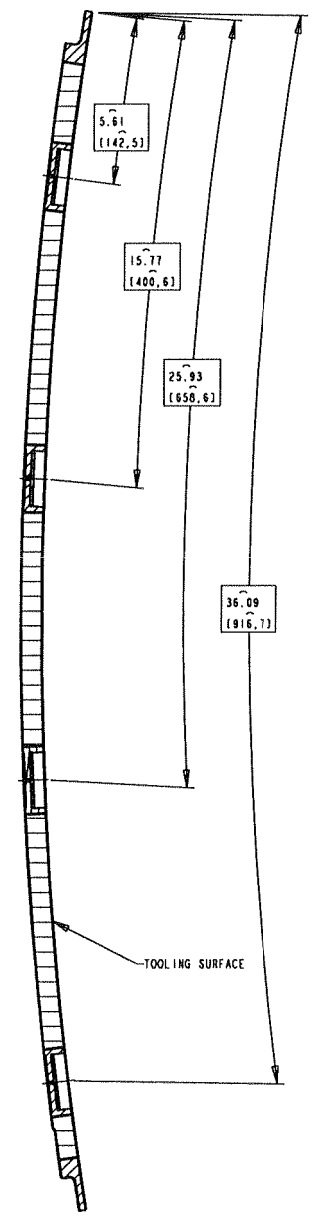

SECTION BA-BA 21 C7
SCALE 1/2

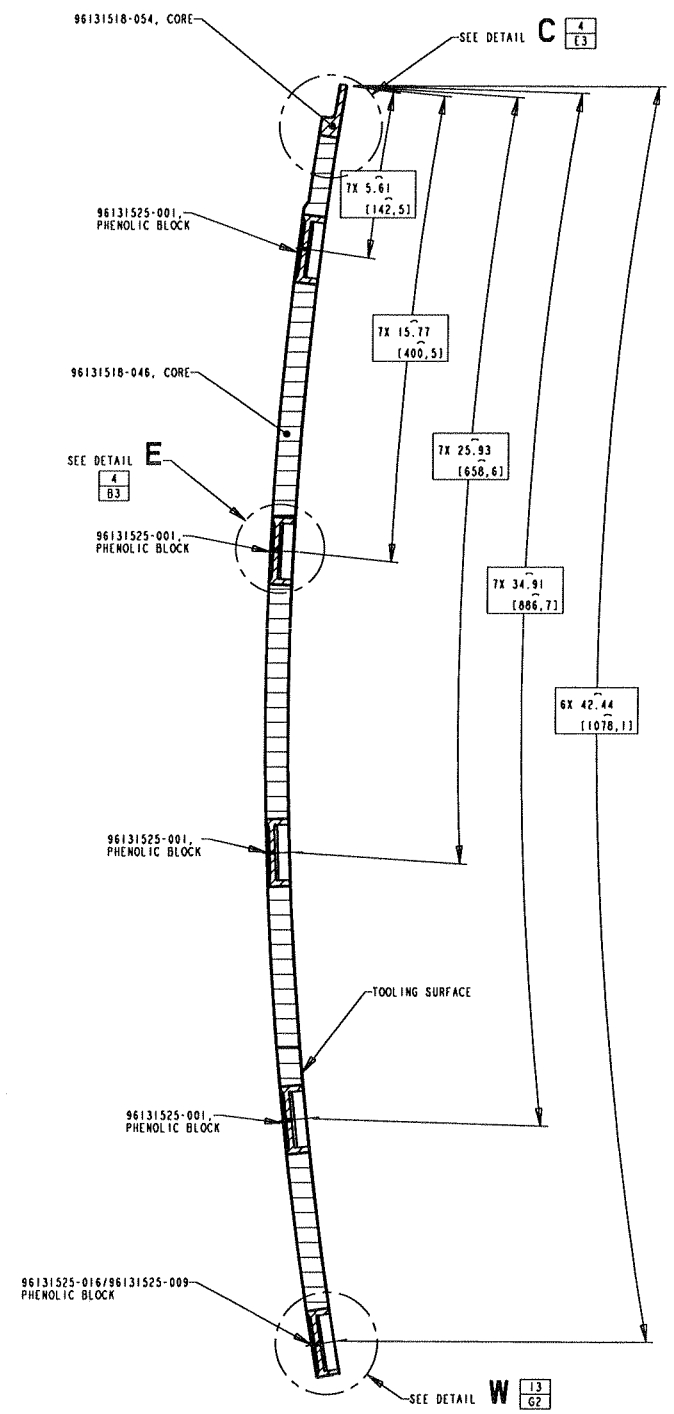

SECTION BB-BB 23 C7
SCALE 1/2

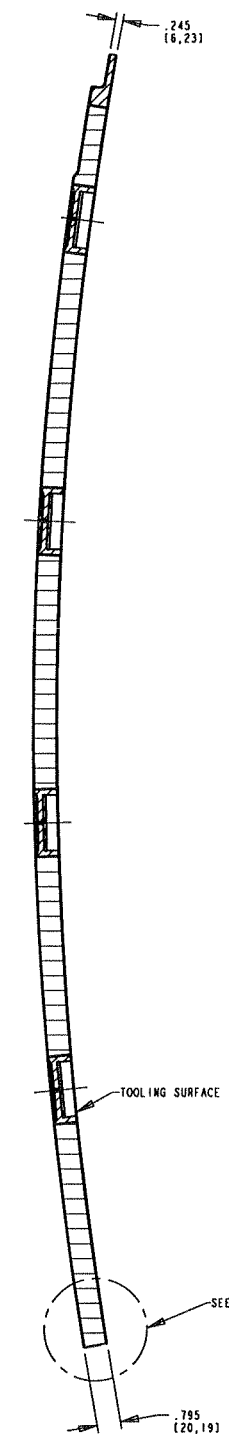

SECTION BC-BC 23 C6
SCALE 1/2

L3 communications Integrated Systems
P.O. BOX 154580
WACO, TEXAS 76715-4580

SIZE	CAGE CODE	DWG NO.	REV
E	0GCL4	96131540	A

SCALE NOTED | Pro/ENGINEER | SHEET 24

DWG NO. 96131540 SH 24

C86(33)

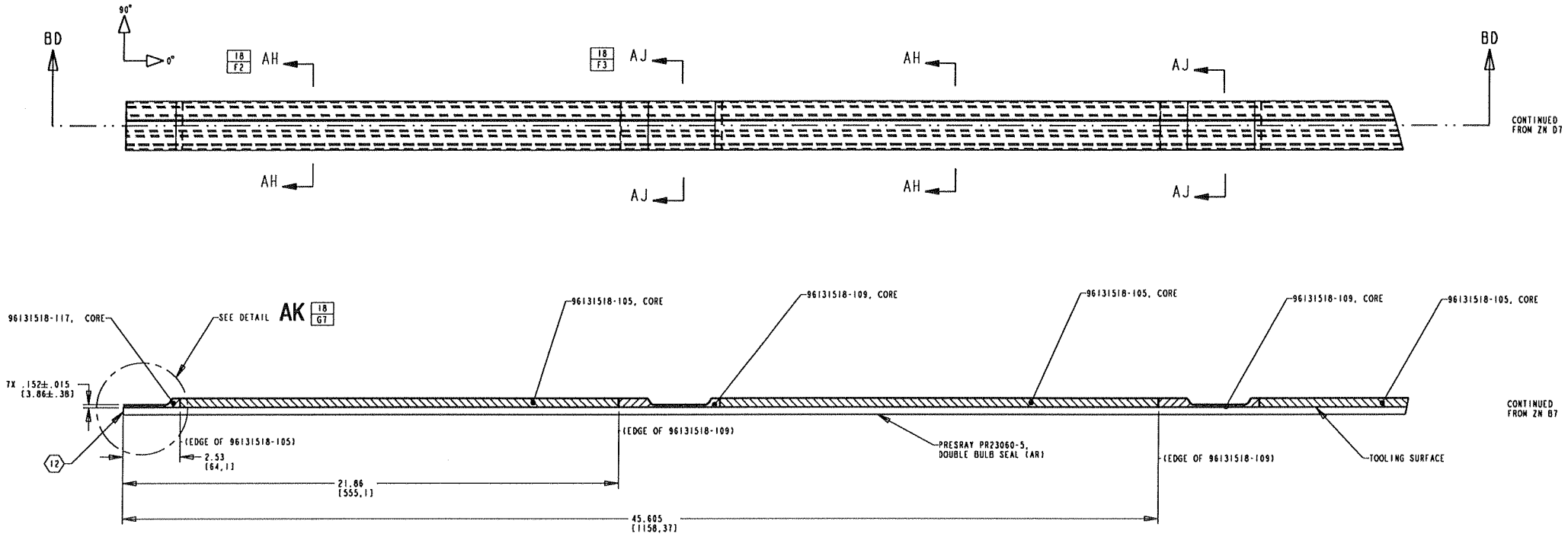

SECTION BD-BD

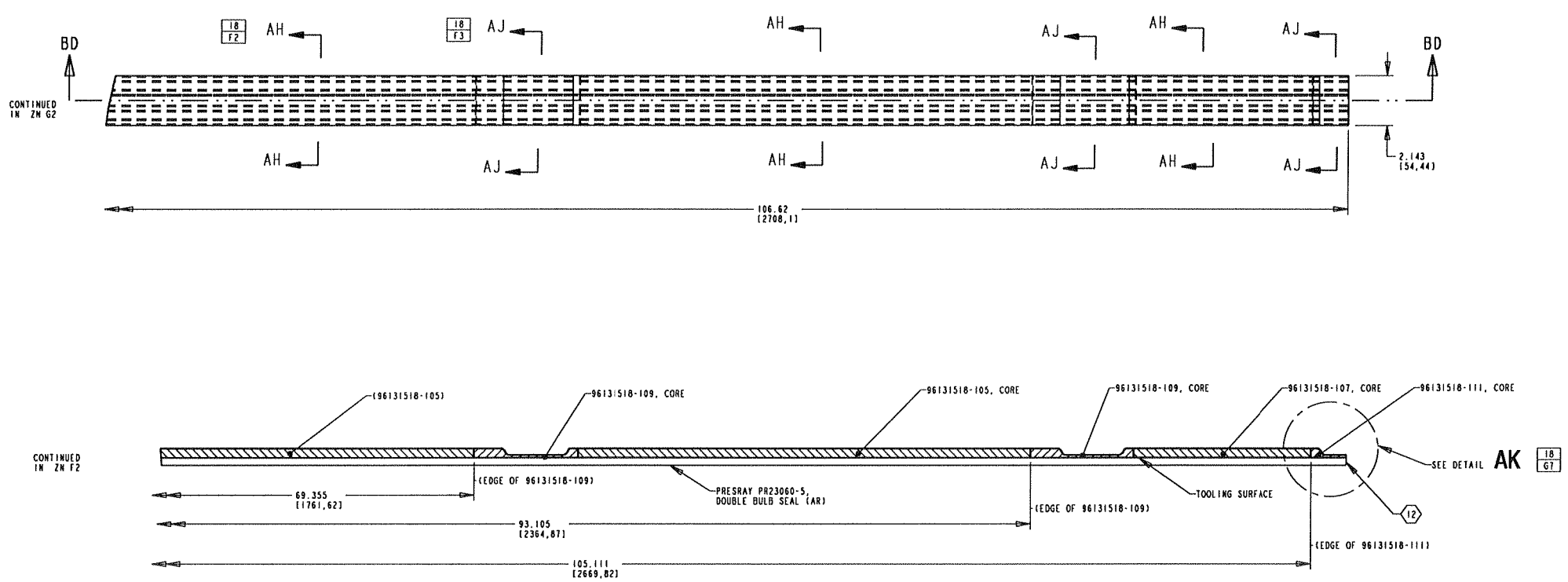

SECTION BD-BD

-019 SEAL INSULATION ASSY

SCALE 1/2

L3 communications Integrated Systems
P.O. BOX 134580 WACO, TEXAS 76715-4580

SIZE	CAGE CODE	DWG NO.	REV
E	06CL4	96131540	A

SCALE NOTED | PROJ/ENGINEER | SHEET 25

96131540 25

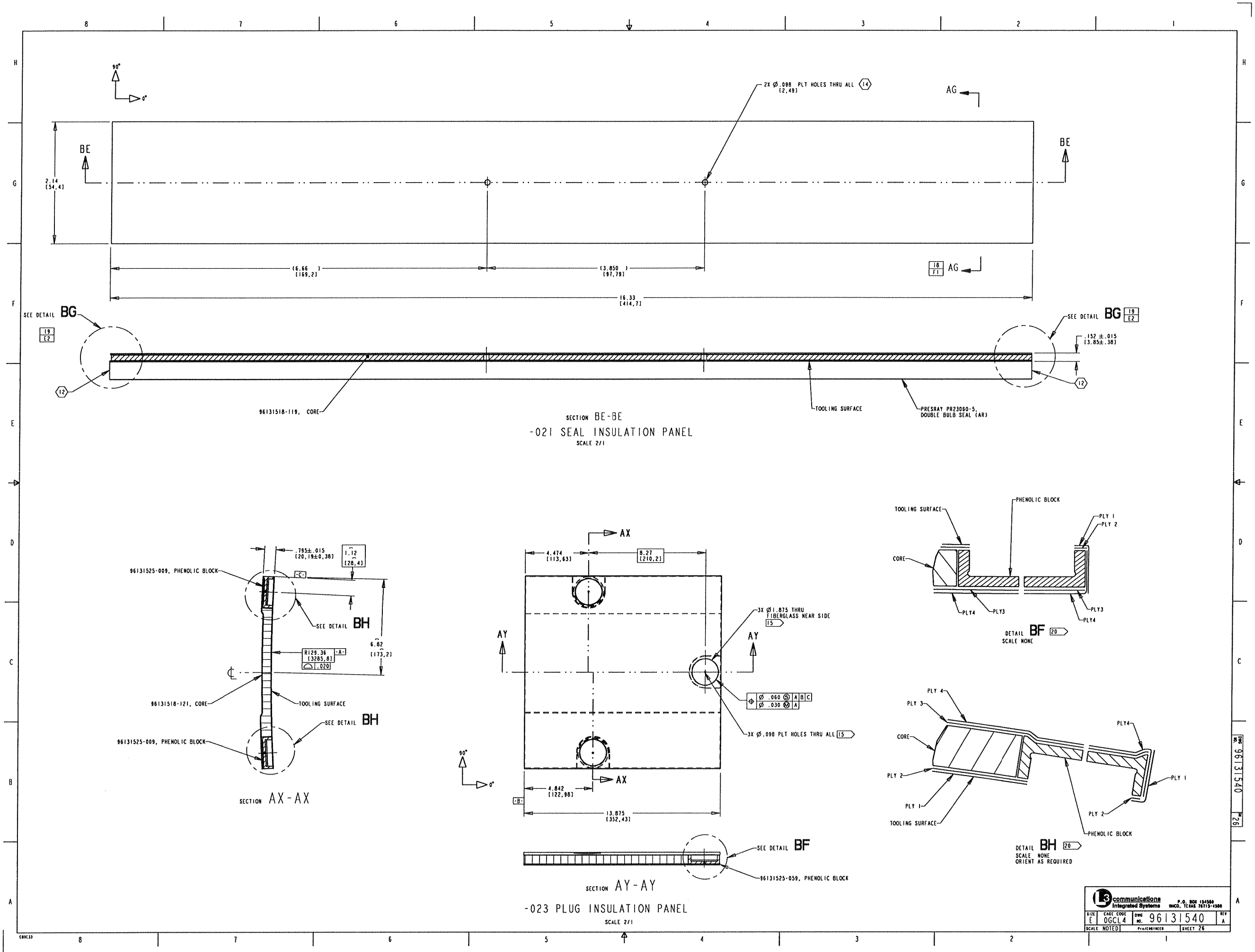

2X Ø.098 PLT HOLES THRU ALL 14
[2,49]
AG
BE
2.14
[54,4]
(6.66)
[169,2]
(3.850)
[97,79]
18
F1
16.33
[414,7]
SEE DETAIL BG
19
E2
.152 ±.015
[3.85±.38]
12
96131518-119, CORE
TOOLING SURFACE
PRESRAY PR23060-5,
DOUBLE BULB SEAL (AR)
SECTION BE-BE
-021 SEAL INSULATION PANEL
SCALE 2/1
.795±.015
[20,19±0,38]
1.12
[28,4]
96131525-009, PHENOLIC BLOCK
-C-
SEE DETAIL BH
R129.36
[3285,8]
-A-
.020
6.82
[173,2]
96131518-121, CORE
TOOLING SURFACE
SEE DETAIL BH
96131525-009, PHENOLIC BLOCK
SECTION AX-AX
AX
4.474
[113,63]
8.27
[210,2]
AY
3X Ø1.875 THRU
FIBERGLASS NEAR SIDE
15
Ø .060 S A B C
Ø .030 M A
3X Ø.098 PLT HOLES THRU ALL 15
90°
0°
4.842
[122,98]
-B-
13.875
[352,43]
SEE DETAIL BF
96131525-059, PHENOLIC BLOCK
SECTION AY-AY
-023 PLUG INSULATION PANEL
SCALE 2/1
TOOLING SURFACE
PHENOLIC BLOCK
PLY 1
PLY 2
CORE
PLY4
PLY3
PLY3
PLY4
DETAIL BF 20
SCALE NONE
PLY 4
PLY 3
CORE
PLY 2
PLY 1
TOOLING SURFACE
PLY4
PLY 1
PLY 2
PHENOLIC BLOCK
DETAIL BH 20
SCALE NONE
ORIENT AS REQUIRED
L3 communications
Integrated Systems
P.O. BOX 154580
WACO, TEXAS 76715-4580
SIZE E
CAGE CODE 0GCL4
DWG NO. 96131540
REV A
SCALE NOTED
Pro/ENGINEER
SHEET 26
DWG NO. 96131540
REV 26