DRAWING LIST

DRAWING NUMBER: DRAWING CODE	DRAWING NUMBER: BALLOON NO	DESCRIPTION	QTY/ ASSY	
060213MFA750		BALLAST PLATE STACK	1	
060213MFA751		LIFTING PLATE ASSEMBLY	1	2
060213MFA755		BALLAST PLATE	3	3 4
060213MFA756		BALLAST PLATE TOP	1	
060213MFA757		BALLAST PLATE KEY	4	

COMMERCIAL PARTS LIST

BALLOON NO	DESCRIPTION	QTY/ ASSY
1	.500-13 UNC-2A X 1.75 LG, HX SOC HD CAP SCREW, GRADE 8	8
2	2.5 LIFTING EYEBOLT, 50,000 LBS LOAD RATING, KEN FORGING INC. PART #K2017 OR EQUIVALENT.	4

TORQUE VALUES (FT-LBS DRY)	
NO.	TIGHTENING TORQUE
C1	70-80

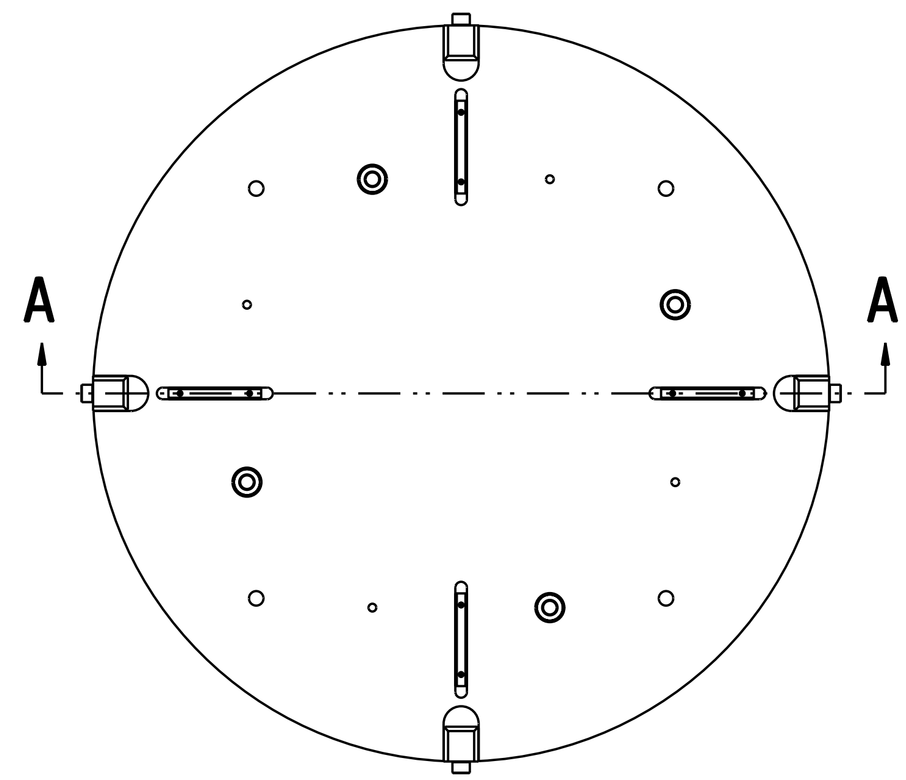

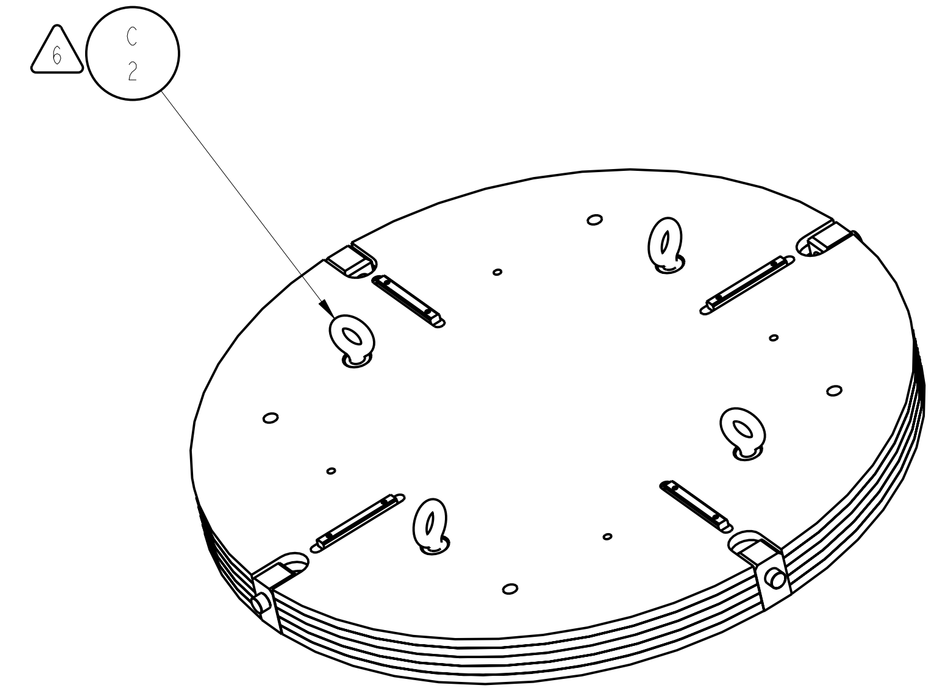

1. APROX MASS
   - ASSEMBLY (A750): 35,500 LBS.
   - BALLAST PLATE (A755): 7,000 LBS.

2. FABRICATE EXTRA LIFTING PLATE ASSEMBLY (A751) FOR ADDITIONAL BALLAST PLATE OPTION REQUIREMENT.

3. FABRICATE 1 EXTRA BALLAST PLATE (A755) FOR ADDITIONAL BALLAST PLATE OPTION REQUIREMENT.

4. FABRICATE 1 EXTRA BALLAST PLATE (A755) FROM 1.0 THICK MATERIAL FOR OPTIONAL BALLAST PLATE WEIGHT REQUIREMENT.

5. 1.0 THICK BALLAST PLATE MAY BE SUBSTITUTED FOR ANY OF THE BALLAST PLATES (A755) OR THE TOP PLATE (A756).

6. REMOVE LIFTING EYEBOLTS AFTER ASSEMBLY INSTALLATION IN SEGMENT.

SEE VIEW B

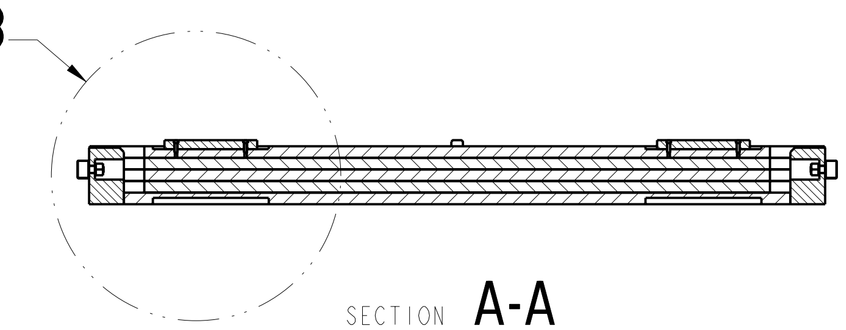

SECTION A-A

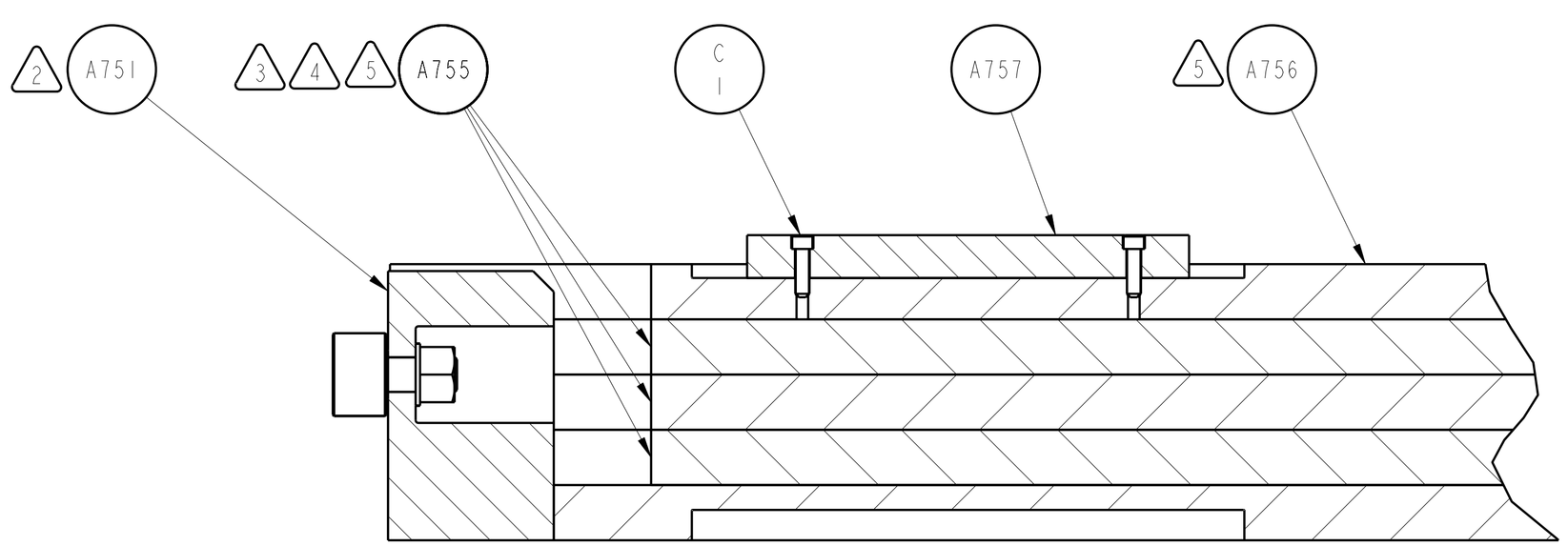

DETAIL B
SCALE 1/4

DATE / INITIAL	ECR	DEV	WAV	ECR IMPLEMENTED / QA SIGNATURE/DATE

Released by AIX USS CMO on 2/22/08
For Procurement Use Only
DO NOT COPY

CHG	ZONE	DESCRIPTION	APP/DATE

REVISIONS

PRIOR TO USE VERIFY THE INTENDED PURPOSE IN PDM ("FOR" ATTRIBUTE)

UNLESS OTHERWISE SPECIFIED DIMENSIONS ARE IN INCHES

TOLERANCE ON: .X, .XX, .XXX, FRACTION, ANGULAR, BREAK EDGES

CONTRACT
CONTRACTOR
TASK ORDER

DRAFTER	DEZ/J.CHANGLE
ENGINEER	DES/J. HUNTER
DESIGNER	DEZ/C. REDDING

DIMENSIONING AND TOLERANCING PER ASME Y14.5M-1994

PDM REL LEVEL: Design PDM REVISION: -
PDM DATABASE:
MODEL NAME: 060213MFA750_BALLAST-5_ASM
CHECK FOR ANY OUTSTANDING ECO'S PRIOR TO USE

NATIONAL AERONAUTICS AND SPACE ADMINISTRATION
JOHN H. GLENN RESEARCH CENTER
LEWIS FIELD
CLEVELAND, OHIO

US-7 BALLAST ASSEMBLY
060213MFA600

A750 BALLAST PLATE STACK

SIZE	DRAWING NUMBER	REV	BLDG	AREA
D	060213MFA750	-	50	HI BAY

UNITS: INCH

SCALE:	INITIAL REL DATE	SHEET	DISCIPLINE
1/20	02/25/2008	1 OF 1	MECHANICAL

PRO/E VERSION: Wildfire 2.0

SIZE D DRAWING NUMBER 060213MFA750 REV -

NAME:CHANGLE OBJECT:060213MFA750_BALLAST-5_ASM DATE:29-Feb-08 06:41:33