DRAWING LIST

DRAWING NUMBER: DRAWING CODE	DRAWING NUMBER: BALLOON NO	DESCRIPTION	QTY/ ASSY
060213MFA751		LIFTING PLATE ASSEMBLY	1
060213MFA752		LIFTING PLATE	1
060213MFA753		LIFTING PLATE BLOCK	4
060213MFA754		LIFTING PIN	4

COMMERCIAL PARTS LIST

BALLOON NO	DESCRIPTION	QTY/ ASSY
1	.375-16 UNC-2A X 1.0 LG, HEX SOC HD CAP SCREW, STEEL, GRADE 8	8
2	Ø1.25 WASHER, PLAIN, STEEL	4
3	1.25-12 UNF-2B HEX NUT, STEEL, GRADE 8	4
4	Ø3.0 X 2.0 GUIDE ROLLER WITH STUD USE OSBORN PART #PLR-3 OR EQUIVALENT	4

TORQUE VALUES (FT-LBS DRY)

NO.	TIGHTENING TORQUE
C1	45-50
C3	650-700

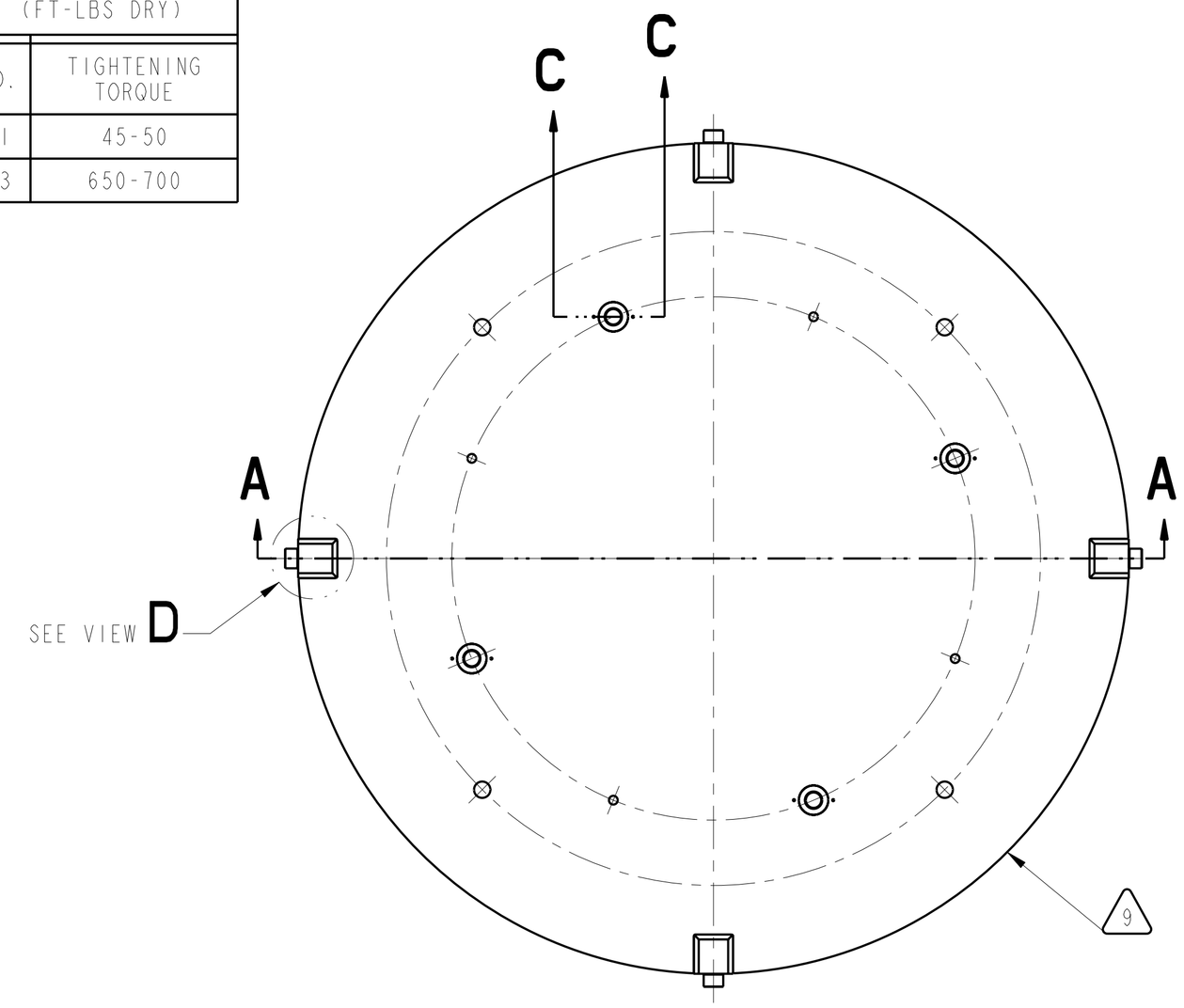

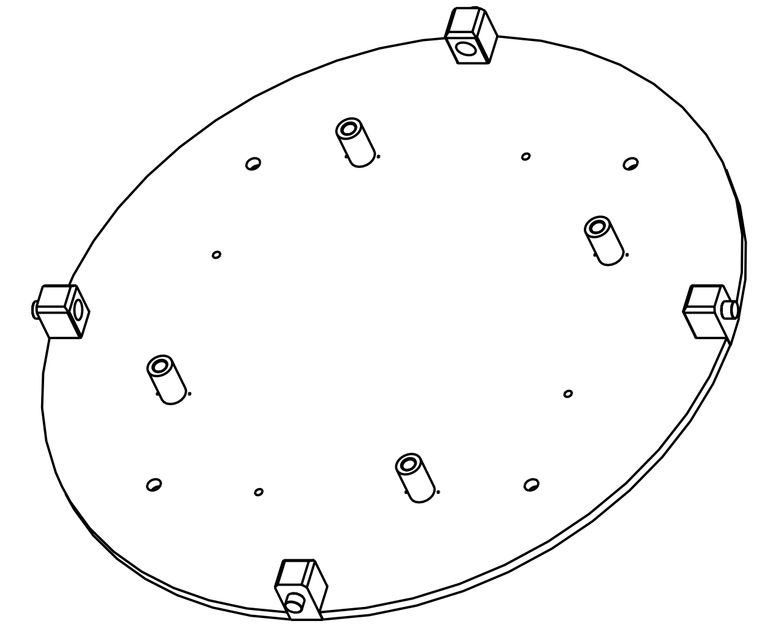

SCALE 1/20

1. ALL WELD JOINTS SHALL BE CLASSIFIED AS CLASS B AND BE SUBJECTED TO VISUAL WELD EXAMINATION AND THEIR CORRESPONDING WELD CLASS NONDESTRUCTIVE TESTING (NDT) REQUIREMENTS IN ACCORDANCE WITH GRC-ARES-1-X REQ-061 AEROSPACE WELDING REQUIREMENTS.
2. ALL WELDING SHALL BE PERFORMED USING A QUALIFIED PROCEDURE AS INDICATED ON THE WELD PROCEEDURE SPECIFICATION (WPS) IN ACCORDANCE WITH GRC-ARES-1-X-FAB-035 "WELDING FABRICATION PRCEEDURE" AND GRC-ARES-1-X-REQ-061.
3. ALL WELDING SHALL BE PERFORMED USING WELD FILLER MATERIALS THAT MEET EITHER E71T-1M ELECTRODE REQUIREMENTS PER AWS A5.20, "SPECIFICATION FOR CARBON STEEL ELECTRODES FOR FLUX-CORED ARC WELDING (FCAW)" USING THE FCAW PROCESS, MEET ER70S-3 ELECTRODE SOLID PER AWS 5.18, "SPECIFICATION FOR CARBON STEEL ELECTRODES AND RODS FOR GAS SHIELDED ARC WELDING USING THE GAS METAL ARC WELDING (GMAW) PROCESS, OR MEET ER70S-2 OR ER70S-3 FILLER ROD (SOLID) PER AWS 5.18, SPECIFICATION FOR CARBON STEEL ELECTRODES AND RODS FOR GAS SHIELDED ARC WELDING USING THE GAS TUNGSTEN ARC WELDING (GTAW) PROCESS. FILLER MATERIAL SELECTION SHALL BE AS INDICATED ON THE WELD PROCEEDURE SPECIFICATION (WPS) IN GRC-ARES-1-X-FAB-035.
4. WELD SYMBOLS SHALL BE PER AWS A2.4, "STANDARD SYMBOLS FOR WELDING, BRAZING, AND NONDESTRUCTIVE EXAMINATION" AS SHOWN IN THE GRC EDD DRAFTING STANDARDS AND GUIDELINES.
5. UTILIZE WELD ACCEPTANCE CRITERIA FOR THE SPECIFIC NDT METHOD IN ACCORDANCE WITH GRC-ARES-1-X-REQ-061.

6. FILLET ON INSIDE BLOCK FACE ONLY. REFER TO DETAIL 'D'.

7. APPLY PEMOVABLE THREAD LOCK, USE LOCTITE PART #242 OR EQUIVALENT.

8. 1/4" HOLDBACK FROM EDGES AND CORNERS.

9. METAL STAMP DRAWING NUMBER 060213MFA751 USING A 1/4 INCH HIGH CHARACTER ON SPECIFIED SURFACE PER SAE-AS478, METHOD 30 (ZONE C4).

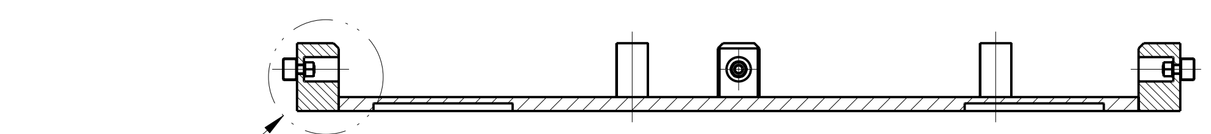

SECTION A-A

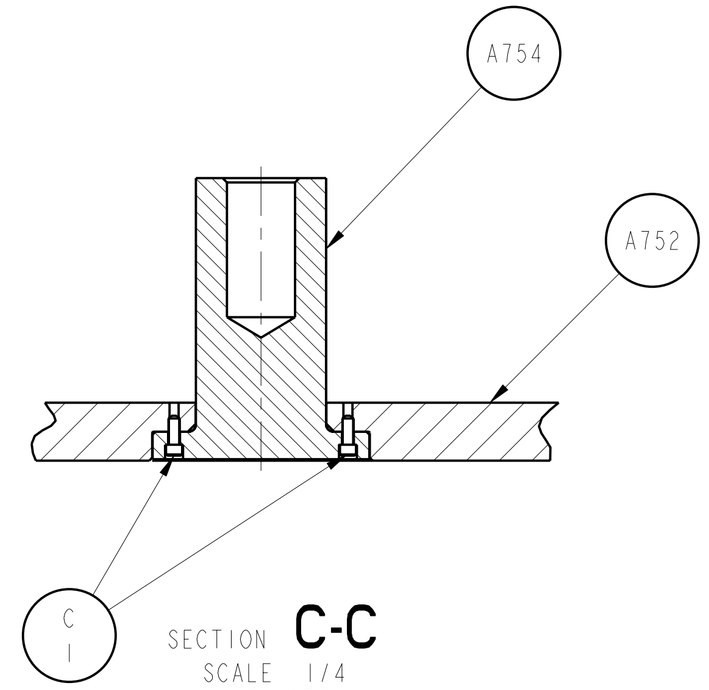

SECTION C-C
SCALE 1/4
4 PLACES

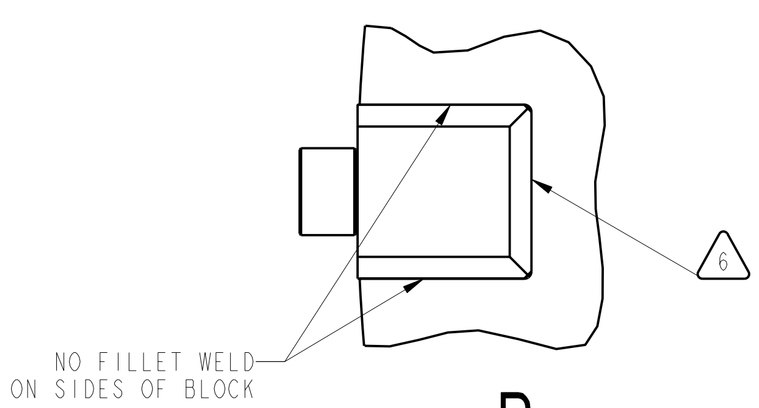

DETAIL D
SCALE 1/4
4 PLACES

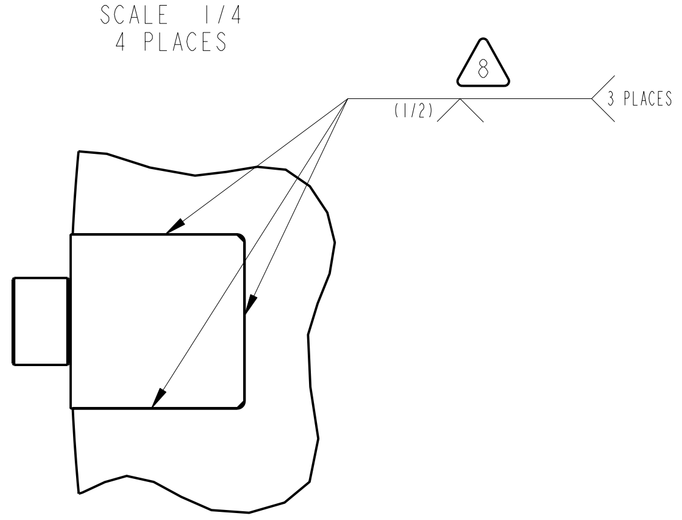

SCALE 1/4
4 PLACES
(BOTTOM VIEW)

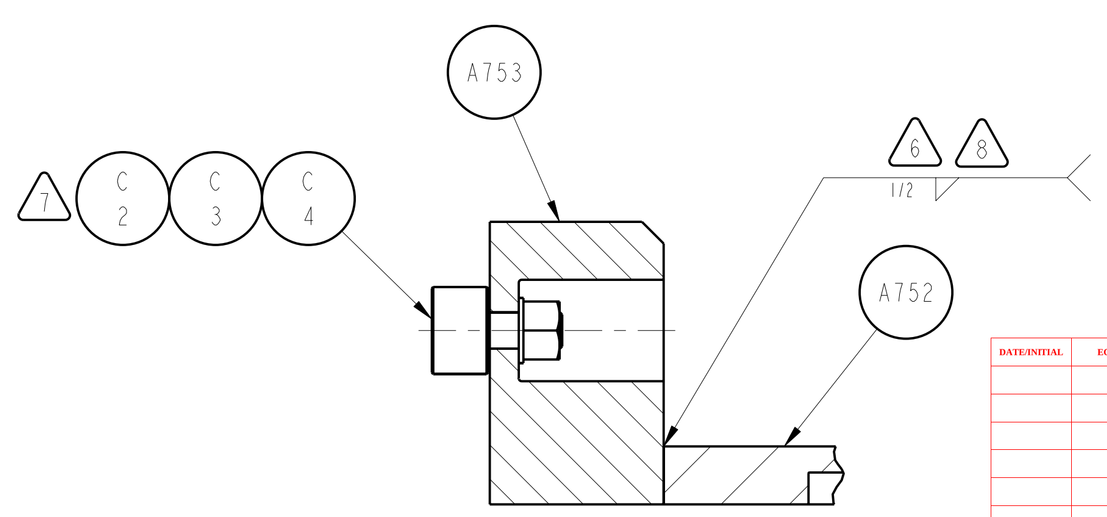

DETAIL B
SCALE 1/4
4 PLACES

Released by AIX USS CMO on 2/12/08
For Procurement Use.
CM Controlled. Uncontrolled when printed.

DATE/INITIAL	ECR	DEV	WAV	IMPLEMENTED

CHG	ZONE	DESCRIPTION	APP/DATE
		REVISIONS	

PRIOR TO USE VERIFY THE INTENDED PURPOSE IN PDM ("FOR" ATTRIBUTE)

UNLESS OTHERWISE SPECIFIED DIMENSIONS ARE IN INCHES

CONTRACT
CONTRACTOR

TOLERANCE ON		TASK ORDER	
.X	± .2	DRAFTER	DEZ/C. REDDING
.XX	±	ENGINEER	DES/J. HUNTER
.XXX	±	DESIGNER	DEZ/C. REDDING
FRACTION	±	DIMENSIONING AND TOLERANCING PER ASME Y14.5M-1994	
ANGULAR	±		
BREAK EDGES			

PDM REL LEVEL: Released PDM REVISION: -
PDM DATABASE:
MODEL NAME: 060213MFA751_LIFTING_PLATE_ASM
CHECK FOR ANY OUTSTANDING ECO'S PRIOR TO USE

NATIONAL AERONAUTICS AND SPACE ADMINISTRATION
JOHN H. GLENN RESEARCH CENTER
LEWIS FIELD
CLEVELAND, OHIO

BALLAST PLATE STACK
060213MFA750

A751 LIFTING PLATE ASSEMBLY

SIZE	DRAWING NUMBER	REV	BLDG	AREA
D	060213MFA751	-	50	HI BAY
			UNITS: INCH	
SCALE: 1/16	INITIAL REL DATE 02/06/2008	SHEET 1 OF 1	DISCIPLINE MECHANICAL	

PRO/E VERSION: Wildfire 2.0

SIZE D DRAWING NUMBER 060213MFA751 REV -

NAME:CRLASER OBJECT:060213MFA751_LIFTING_PLATE_ASM DATE:06-Feb-08 12:55:05