1. MATERIAL: ASTM A516 GRADE 70, CERTIFIED MATERIAL TEST REPORT REQUIRED.

2. SURFACE FINISH: 125Ra ALL MACHINED SURFACES.

3. PART IDENTIFICATION: METAL STAMP DRAWING PART NUMBER 060213MFA752 ON SPECIFIED SURFACE PER SAE-AS478, METHOD 2A2 (ZONE B7).

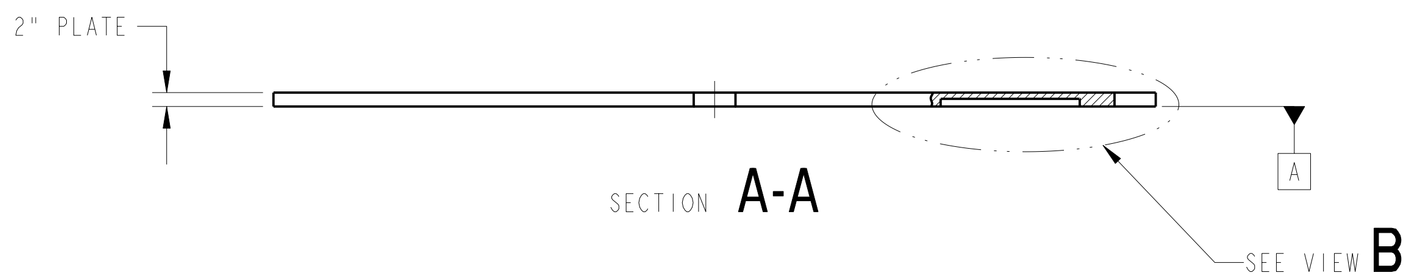

SECTION A-A

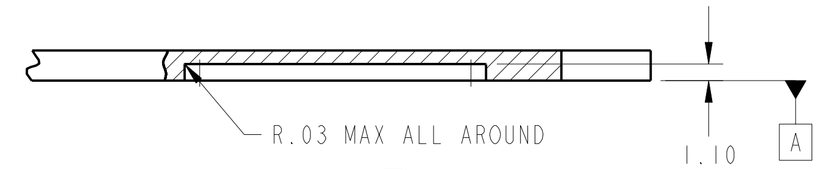

DETAIL B
SCALE 13/100
4 PLACES

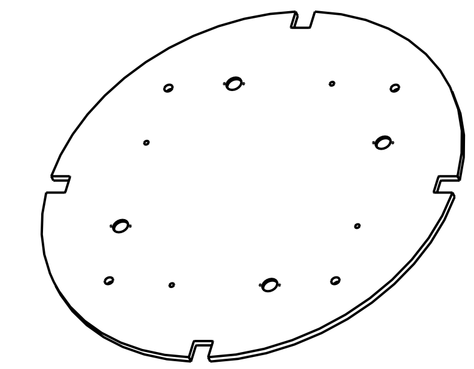

SCALE 3/100

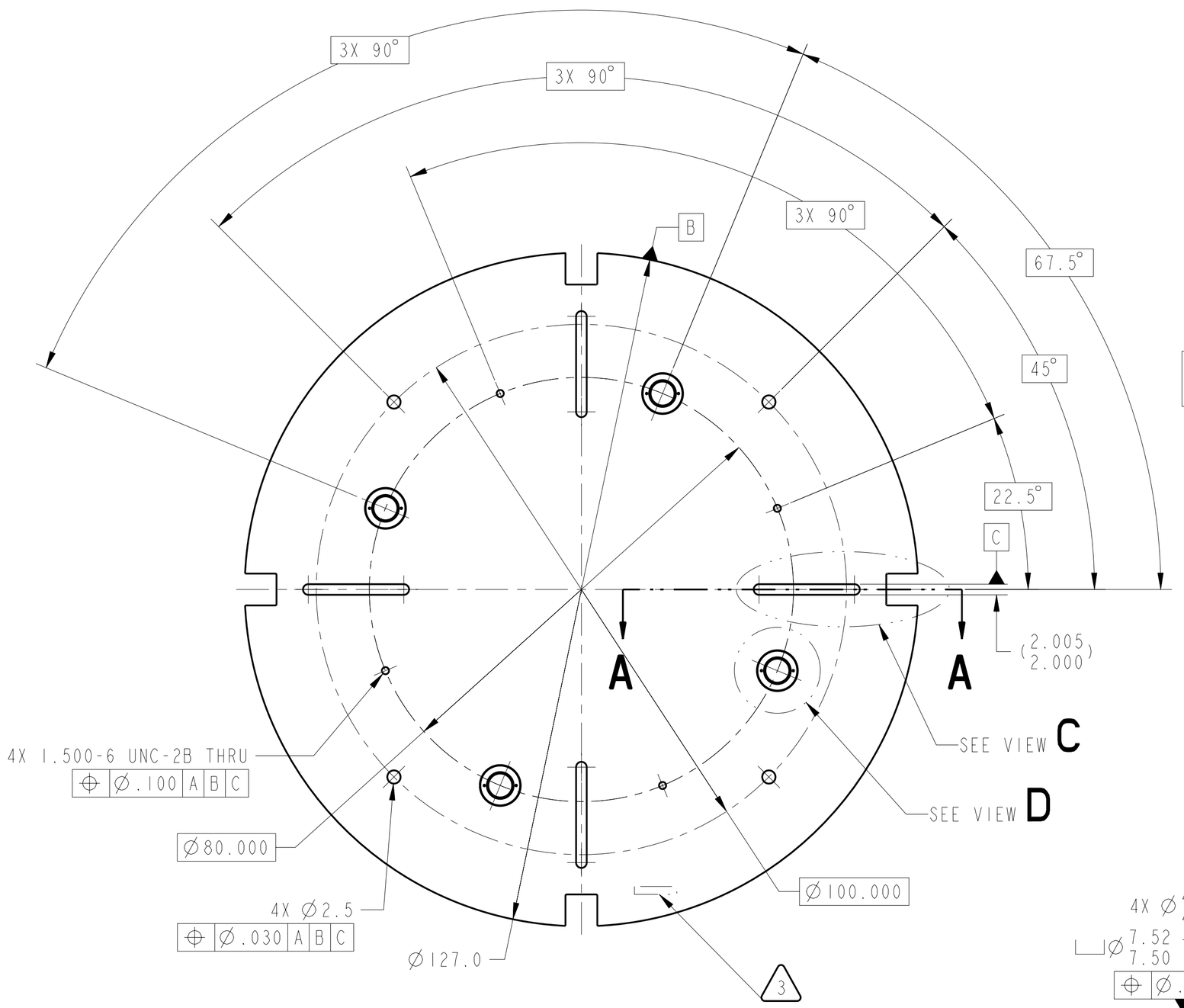

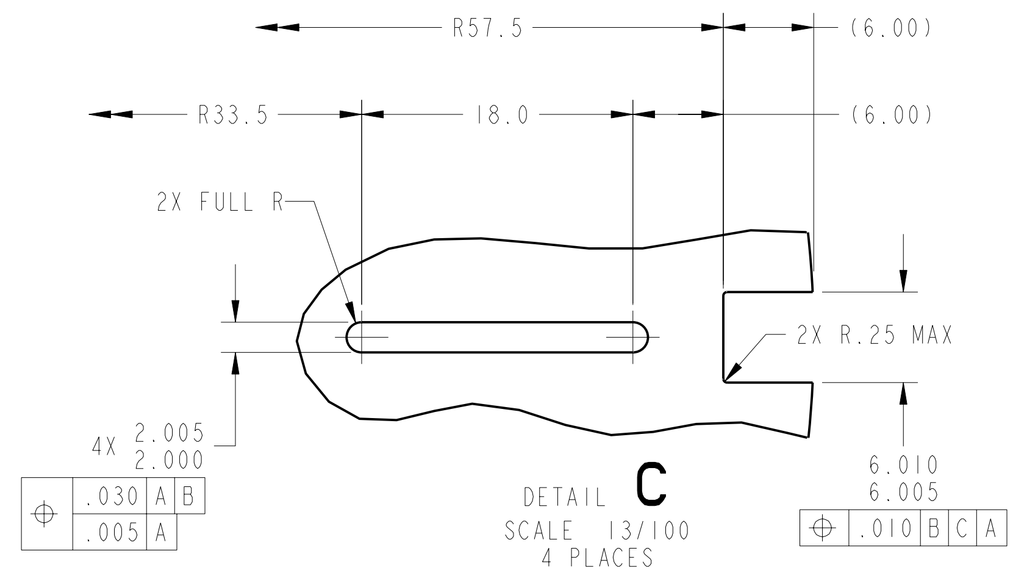

DETAIL C
SCALE 13/100
4 PLACES

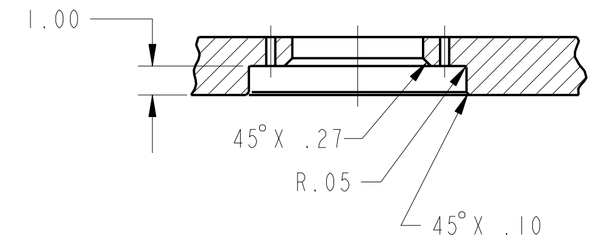

SECTION E-E

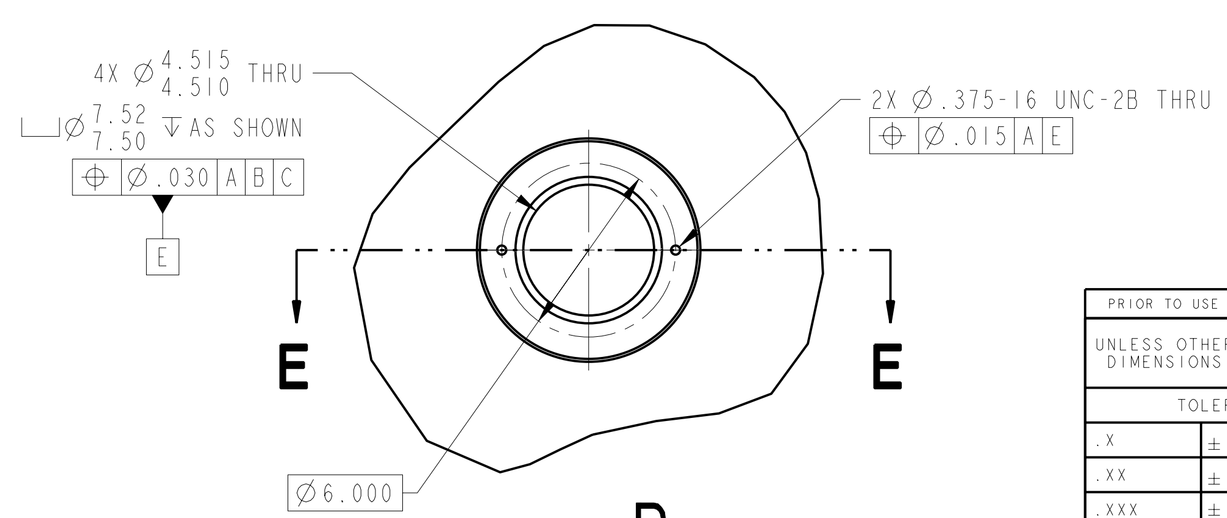

DETAIL D
SCALE 1/4
4 PLACES

DATE/INITIAL	ECR	DEV	WAV	IMPLEMENTED

Released by AIX USS CMO on 2/12/08
For Procurement Use
CM Controlled. Uncontrolled when printed.

CHG	ZONE	DESCRIPTION	APP/DATE

REVISIONS

PRIOR TO USE VERIFY THE INTENDED PURPOSE IN PDM ("FOR" ATTRIBUTE)

UNLESS OTHERWISE SPECIFIED DIMENSIONS ARE IN INCHES

CONTRACT

CONTRACTOR

TOLERANCE ON		TASK ORDER	
.X	± 0.03	DRAFTER	DEZ/C. REDDING
.XX	± 0.01	ENGINEER	DES/J. HUNTER
.XXX	±	DESIGNER	DEZ/C. REDDING
FRACTION	± -	DIMENSIONING AND TOLERANCING PER ASME Y14.5M-1994	
ANGULAR	±		
BREAK EDGES	.03-.05		

NATIONAL AERONAUTICS AND SPACE ADMINISTRATION
JOHN H. GLENN RESEARCH CENTER
LEWIS FIELD
CLEVELAND, OHIO

LIFTING PLATE ASSEMBLY

060213MFA751

A752 LIFTING PLATE

PDM REL LEVEL: Released PDM REVISION: -
PDM DATABASE:
MODEL NAME: 060213MFA752_PLATE_LIFTING
CHECK FOR ANY OUTSTANDING ECO'S PRIOR TO USE

SIZE	DRAWING NUMBER	REV	BLDG	AREA
D	060213MFA752	-	50	HI BAY
			UNITS: INCH	
SCALE: 3/50	INITIAL REL DATE 02/06/2008	SHEET 1 OF 1	DISCIPLINE MECHANICAL	

PRO/E VERSION: Wildfire 2.0

SIZE D DRAWING NUMBER 060213MFA752 REV -

NAME:CRLASER OBJECT:060213MFA752_PLATE_LIFTING DATE:06-Feb-08 12:35:42