1. MATERIAL: AISI 1025, CERTIFIED MATERIAL TEST REPORT REQUIRED.

2. SURFACE FINISH: 63Ra

3. PART IDENTIFICATION: IDENTIFY WITH THE MATERIAL TAG NUMBER FOLLOWED BY LAST FIVE CHARACTERS OF DRAWING NUMBER, THE DASH NUMBER, AND REVISION LETTER. USE 1/8 INCH HIGH CHARACTER, ON SPECIFIED SURFACE (ZONE D7). OPTION 1: ENGRAVE PER SAE-AS478, METHOD 3. OPTION 2: ELECTROCHEMICAL ETCH PER SAE-AS478, METHOD 7A.

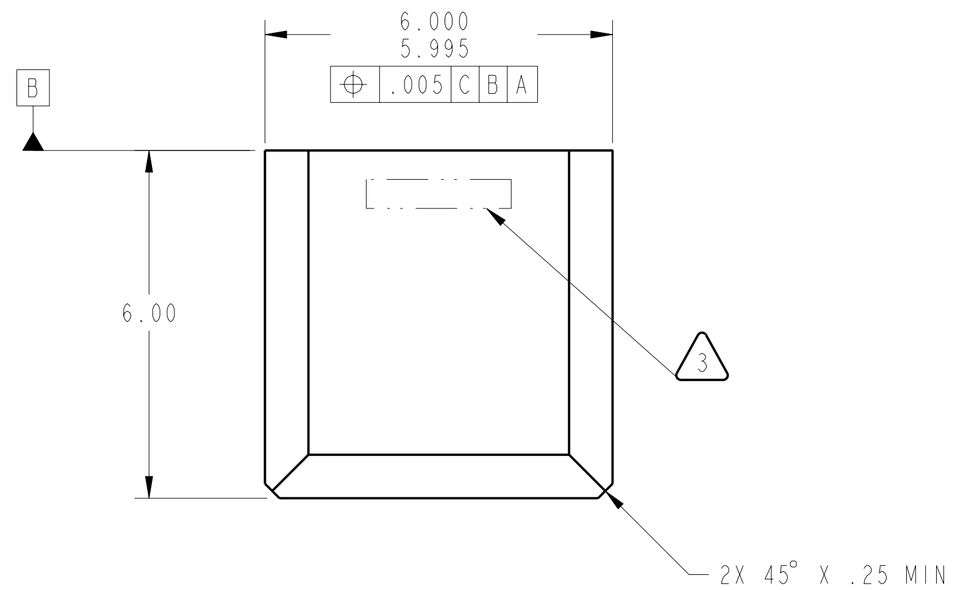

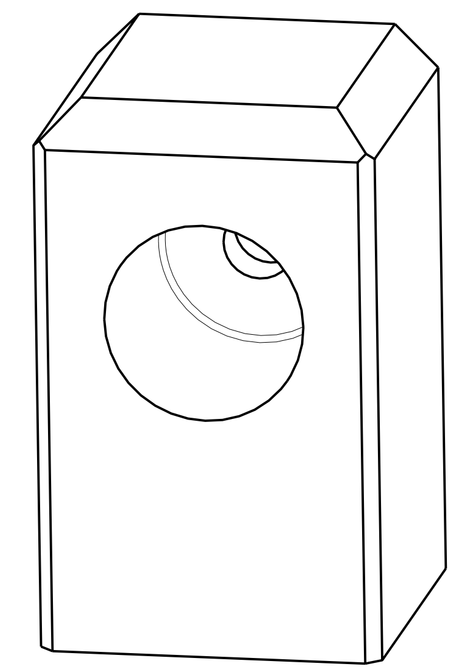

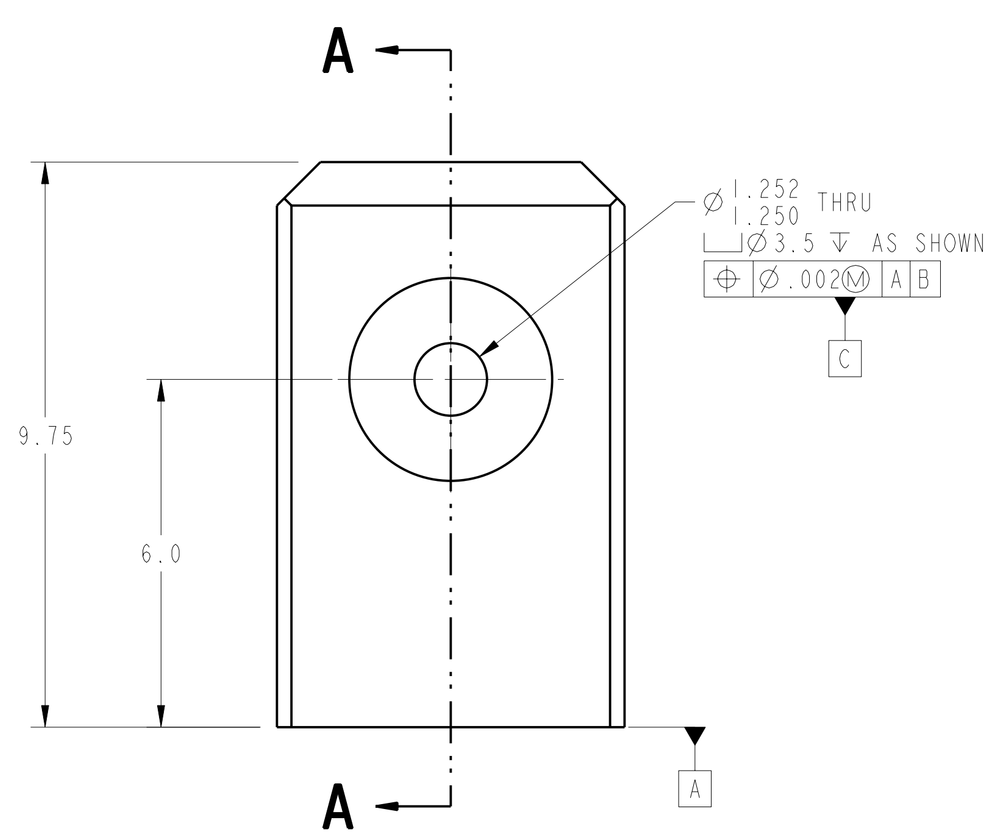

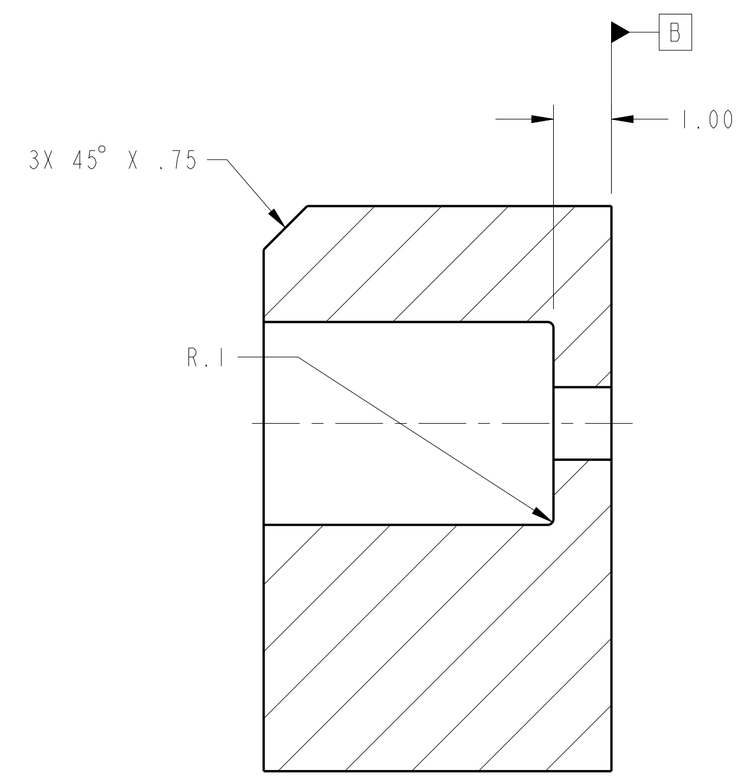

SECTION A-A

DATE/INITIAL	ECR	DEV	WAV	IMPLEMENTED

Released by AIX USS CMO on 2/18/08
For Procurement Use.
CM Controlled. Uncontrolled when printed.

CHG	ZONE	DESCRIPTION	APP/DATE

REVISIONS

PRIOR TO USE VERIFY THE INTENDED PURPOSE IN PDM ("FOR" ATTRIBUTE)

UNLESS OTHERWISE SPECIFIED DIMENSIONS ARE IN INCHES

CONTRACT
CONTRACTOR

TOLERANCE ON		TASK ORDER	
.X	± 0.03	DRAFTER	DEZ/C. REDDING
.XX	± 0.02	ENGINEER	DES/J. HUNTER
.XXX	±	DESIGNER	DEZ/C. REDDING
FRACTION	± -	DIMENSIONING AND TOLERANCING PER ASME Y14.5M-1994	
ANGULAR	± 0.50°		
BREAK EDGES	.01-.03		

NATIONAL AERONAUTICS AND SPACE ADMINISTRATION
JOHN H. GLENN RESEARCH CENTER
LEWIS FIELD
CLEVELAND, OHIO

LIFTING PLATE ASSEMBLY
060213MFA751

A753 LIFTING PLATE BLOCK

PDM REL LEVEL: Released PDM REVISION: -
PDM DATABASE:
MODEL NAME: 060213MFA753_PLATE_BLOCK
CHECK FOR ANY OUTSTANDING ECO'S PRIOR TO USE

SIZE	DRAWING NUMBER	REV	BLDG	AREA
D	060213MFA753	-	50	HI BAY
			UNITS: INCH	
SCALE: 1/2	INITIAL REL DATE 1/10/2008	SHEET 1 OF 1	DISCIPLINE MECHANICAL	

PRO/E VERSION: Wildfire 2.0

SIZE D DRAWING NUMBER 060213MFA753 REV -

NAME:CRASER OBJECT:060213MFA753_PLATE_BLOCK DATE:10-Jun-08 18:10:25