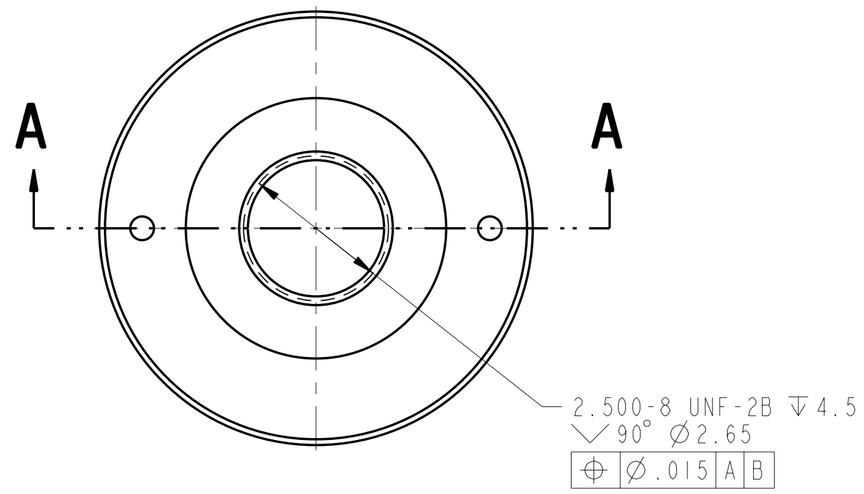

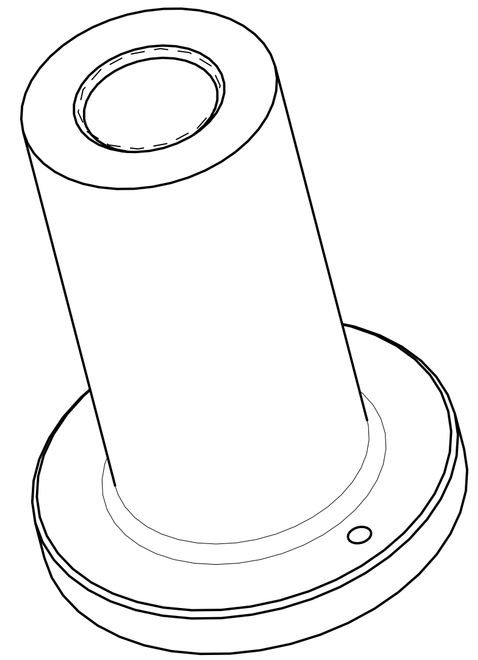

1. MATERIAL: AISI 4140 NORMALIZED, CERTIFIED MATERIAL TEST REPORT REQUIRED.

2. SURFACE FINISH: 63Ra

3. PART IDENTIFICATION: ENSCRIBE WITH PART DRAWING NUMBER 060213MFA754, USE 1/4 INCH HIGH CHARACTER, ON SPECIFIED SURFACE (ZONE A6). OPTION 1: ENGRAVE PER SAE-AS478, METHOD 3. OPTION 2: ELECTROCHEMICAL ETCH PER SAE-AS478, METHOD 7A.

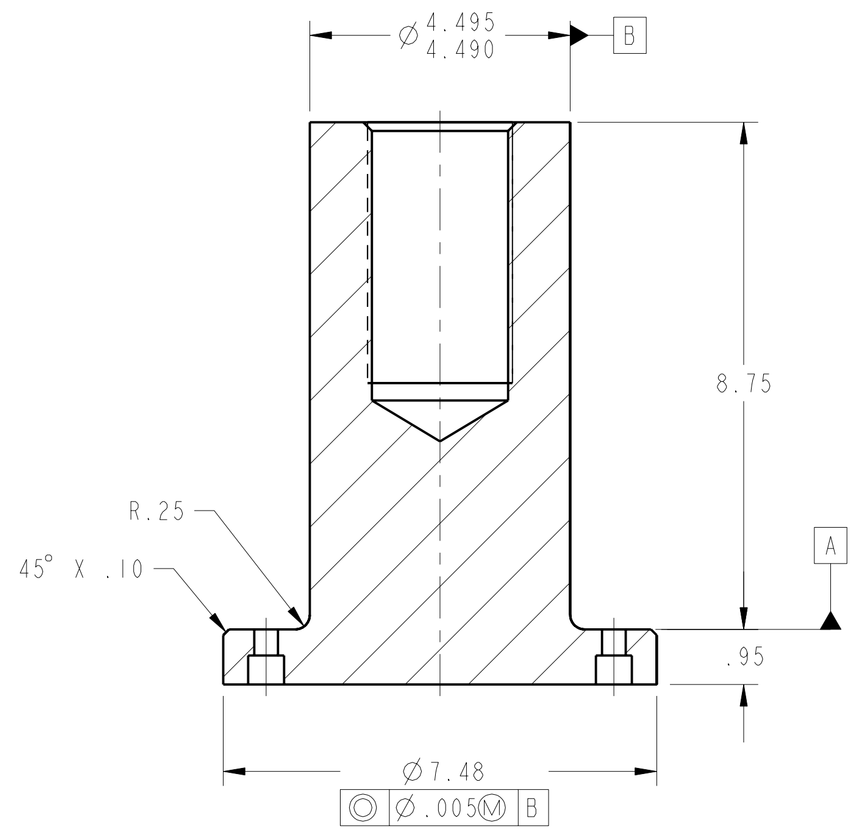

SECTION A-A

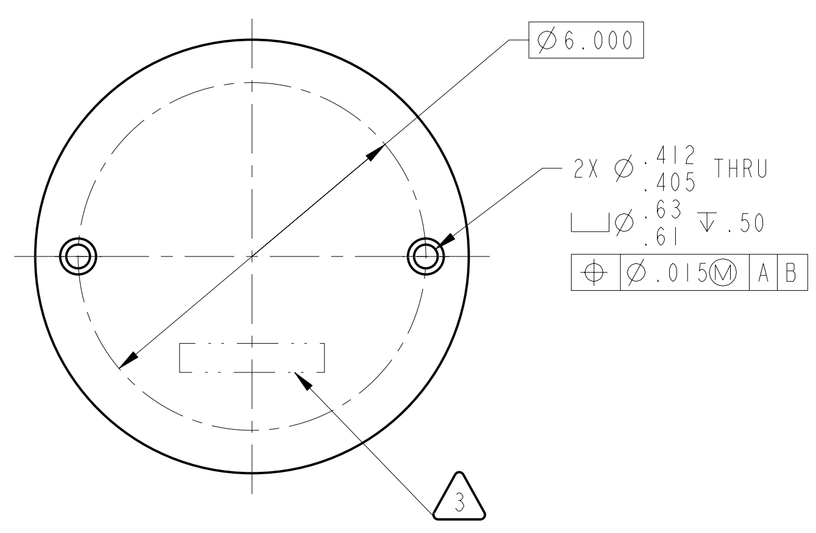

DATE/INITIAL	ECR	DEV	WAV	IMPLEMENTED

Released by AIX USS CMO on 2/18/08
For Procurement Use.
CM Controlled. Uncontrolled when printed.

CHG	ZONE	DESCRIPTION	APP/DATE

REVISIONS

PRIOR TO USE VERIFY THE INTENDED PURPOSE IN PDM ("FOR" ATTRIBUTE)

UNLESS OTHERWISE SPECIFIED DIMENSIONS ARE IN INCHES

CONTRACT
CONTRACTOR

TOLERANCE ON		TASK ORDER	
.X	± 0.03	DRAFTER	DEZ/C. REDDING
.XX	± 0.02	ENGINEER	DES/J. HUNTER
.XXX	±	DESIGNER	DEZ/C. REDDING
FRACTION	± -	DIMENSIONING AND TOLERANCING PER ASME Y14.5M-1994	
ANGULAR	± 0.50°		
BREAK EDGES	.01-.03		

PDM REL LEVEL: Released PDM REVISION: -
PDM DATABASE:
MODEL NAME: 060213MFA754_LIFTING_PIN
CHECK FOR ANY OUTSTANDING ECO'S PRIOR TO USE

NATIONAL AERONAUTICS AND SPACE ADMINISTRATION
JOHN H. GLENN RESEARCH CENTER
LEWIS FIELD
CLEVELAND, OHIO

LIFTING PLATE ASSEMBLY
060213MFA751

A754 LIFTING PIN

SIZE	DRAWING NUMBER	REV	BLDG	AREA
D	060213MFA754	-	50	HI BAY

UNITS: INCH

SCALE:	INITIAL REL DATE	SHEET	DISCIPLINE
1/2 AND NOTED	1/10/2008	1 OF 1	MECHANICAL

PRO/E VERSION: Wildfire 2.0

SIZE D DRAWING NUMBER 060213MFA754 REV -

NAME:CRLASER OBJECT:060213MFA754_LIFTING_PIN DATE:10-Jan-08 18:10:11