1. MATERIAL: AISI 4340/4340H
OIL QUENCH AND TEMPERED TO 33 - 37 Rc
AT MID RADIUS.
CERTIFIED MATERIAL TEST REPORT
(CMTR) REQUIRED.

2. SURFACE FINISH: 63Ra

3. PART IDENTIFICATION: METAL STAMP
DRAWING PART NUMBER 060213MFA757 ON
SPECIFIED SURFACE, PER SAE- AS478,
METHOD 2A2 (ZONE C8).

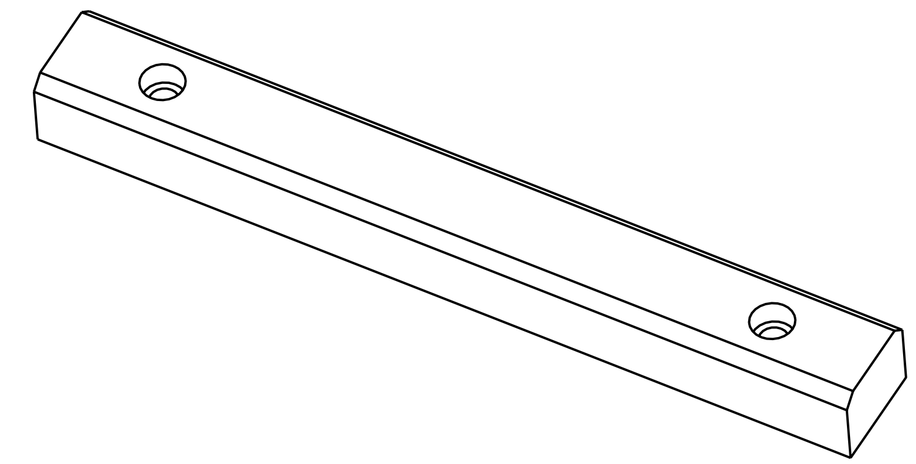

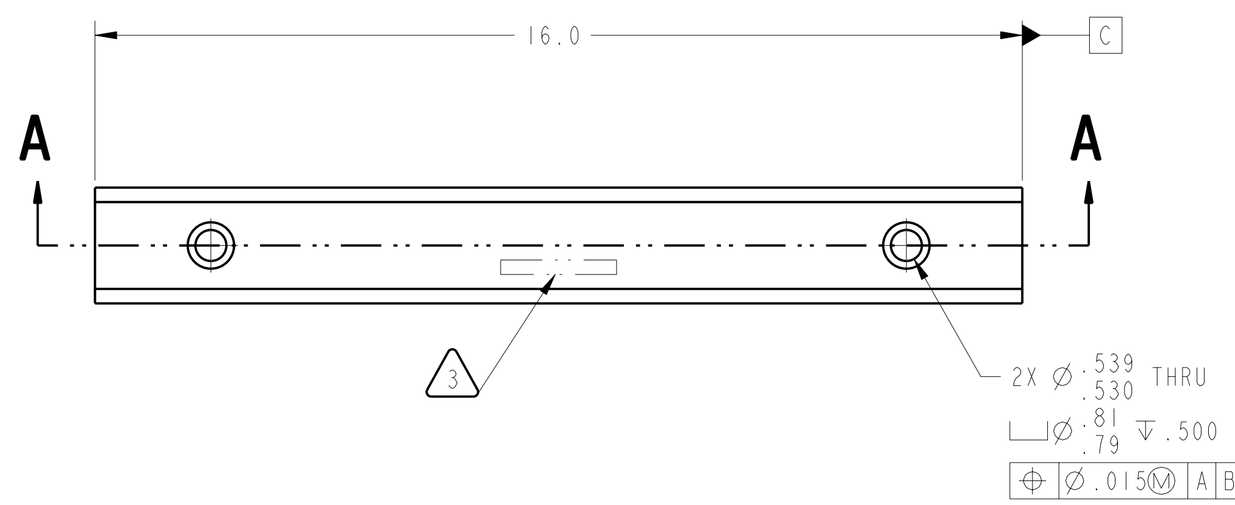

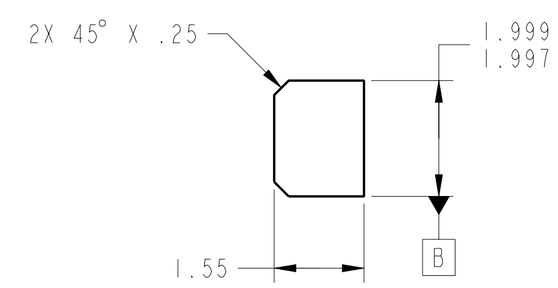

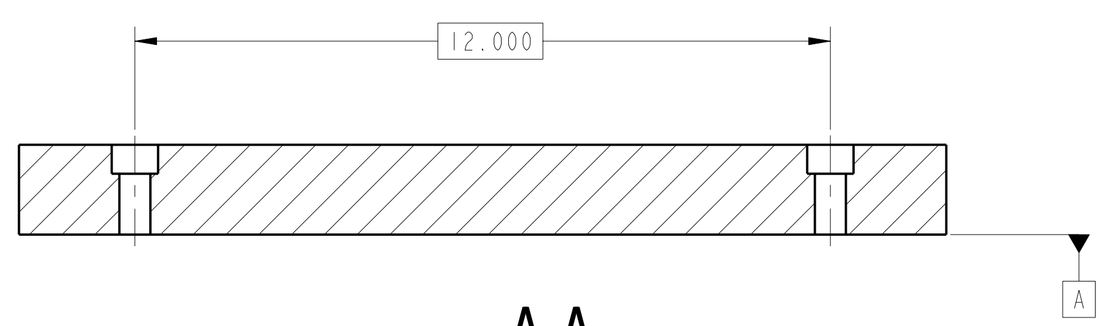

SECTION **A-A**

DATE/INITIAL	ECR	DEV	WAV	IMPLEMENTED

Released by AIX USS CMO on 2/12/08
For Manufacturing Use.
CM Controlled. Uncontrolled when printed.

CHG	ZONE	DESCRIPTION	APP/DATE

REVISIONS

PRIOR TO USE VERIFY THE INTENDED PURPOSE IN PDM ("FOR" ATTRIBUTE)

UNLESS OTHERWISE SPECIFIED DIMENSIONS ARE IN INCHES		CONTRACT / CONTRACTOR	
TOLERANCE ON		TASK ORDER	
.X	± 0.03	DRAFTER	DEZ/C. REDDING
.XX	± 0.01	ENGINEER	DES/J. HUNTER
.XXX	±	DESIGNER	DEZ/C. REDDING
FRACTION	± -	DIMENSIONING AND TOLERANCING PER ASME Y14.5M-1994	
ANGULAR	± 0.50°		
BREAK EDGES	.01-.03		

PDM REL LEVEL: Released PDM REVISION: -
PDM DATABASE:
MODEL NAME: 060213MFA757_PLATE_KEY
CHECK FOR ANY OUTSTANDING ECO'S PRIOR TO USE

NATIONAL AERONAUTICS AND SPACE ADMINISTRATION
JOHN H. GLENN RESEARCH CENTER
LEWIS FIELD
CLEVELAND, OHIO

BALLAST STACK ASSEMBLY
060213MFA750

A757 BALLAST PLATE KEY

SIZE	DRAWING NUMBER	REV	BLDG	AREA
D	060213MFA757	-	50	HI BAY
			UNITS: INCH	
SCALE: 1/2	INITIAL REL DATE 02/06/2008	SHEET 1 OF 1	DISCIPLINE MECHANICAL	

PRO/E VERSION: Wildfire 2.0

SIZE D DRAWING NUMBER 060213MFA757 REV -

NAME:CRUASER OBJECT:060213MFA757_PLATE_KEY DATE:06-Feb-08 13:49:13