DRAWING LIST

DRAWING NUMBER: DRAWING CODE	DRAWING NUMBER: BALLOON NO	DESCRIPTION	QTY/ ASSY
060213MFA830		TUNNEL FWD BULLNOSE ASSEMBLY	1
060213MFA365		KULITE INSERT	3
060213MFA366		INSERT SPACER	3
060213MFA831		TUNNEL START BULLNOSE	1

COMMERCIAL PARTS LIST

BALLOON NO	DESCRIPTION	QTY/ ASSY
C1	INSERT, SCREW-THREAD, LOCKING, KEY LOCKED, HEAVY DUTY, MS51831-109(L), (MATERIAL: TYPE 302/303 STAINLESS STEEL), (FOR .375-24 FASTENER)	5
C2	KULITE TRANSDUCER, XTL-186A-190, ESD (ELECTROSTATIC DISCHARGE) SENSITIVE.	3
C3	.312-18 UNC-3A X .75 LONG SOCKET HEAD, SELF LOCKING, SET SCREW (4)	2

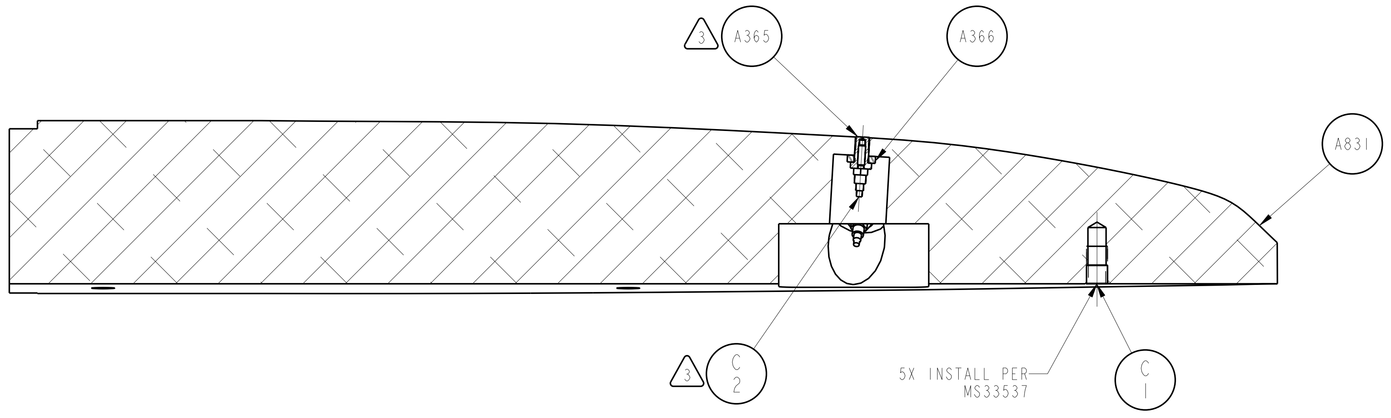

SECTION **A-A**

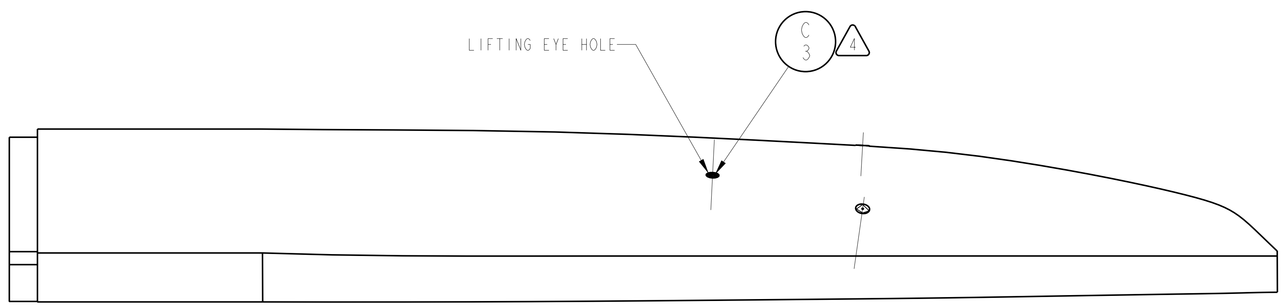

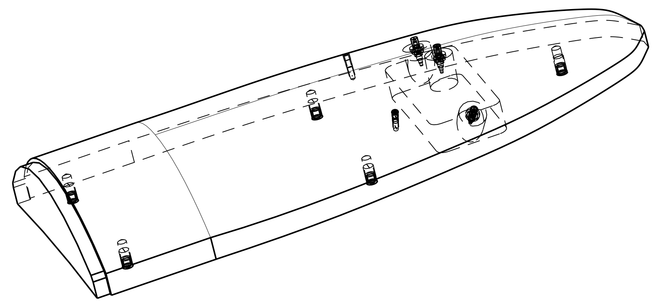

SCALE 1/4

1. REFER TO GRC-ARES IX-FAB-100, DEVELOPMENT FLIGHT INSTRUMENTATION (DFI) SENSOR PROCEDURE FOR ADDITIONAL INFORMATION.
2. SEE DWG. NO. 060213MFA810 FOR KULITE INSTALL ASSEMBLY.
3. CLEAN AND PRIME MATING THREADED SUFACES WITH LOCKTITE #7649 PRIMER "N" OR #7471 PRIMER "T" THEN APPLY LOCKTITE THREADLOCKER 272 PER MANUFACTURERS DIRECTIONS.
4. FASTENERS ARE TO BE INSTALLED AFTER PROTUBERANCE INSTALLATION.
5. APROXIMATE WEIGHT 130 LBS.

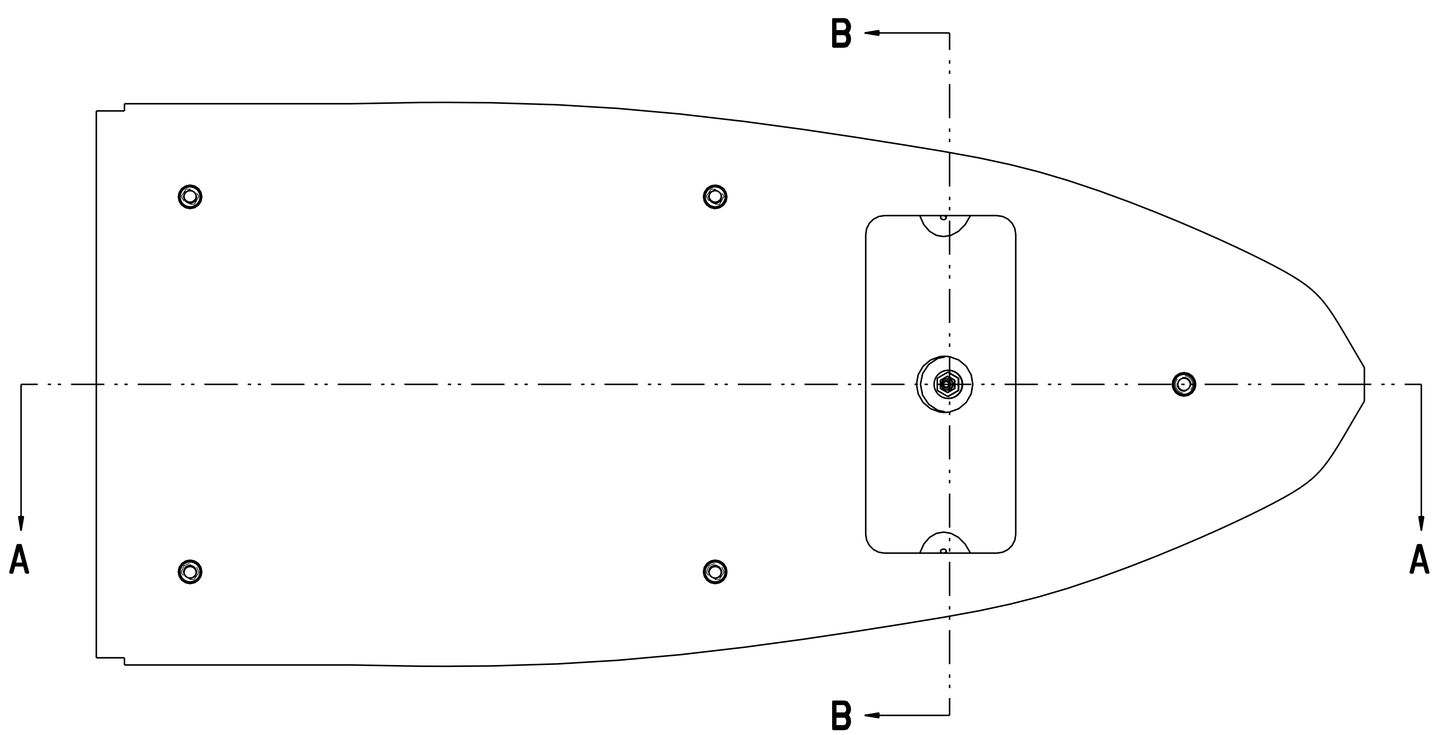

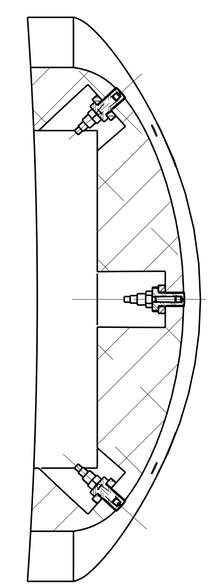

SECTION **B-B**

DATE / INITIAL	ECR	DEV	WAV	ECR IMPLEMENTED / QA SIGNATURE/DATE

Released by AIX USS CMO on 2/29/08
For Procurement Use Only
DO NOT COPY

CHG	ZONE	DESCRIPTION	APP/DATE

REVISIONS

PRIOR TO USE VERIFY THE INTENDED PURPOSE IN PDM ("FOR" ATTRIBUTE)

UNLESS OTHERWISE SPECIFIED DIMENSIONS ARE IN INCHES

CONTRACT
CONTRACTOR
TASK ORDER

TOLERANCE ON	
.X	± -
.XX	± -
.XXX	± -
FRACTION	± -
ANGULAR	± -
BREAK EDGES	-

DRAFTER	DEZ/D. DRAGONY
ENGINEER	DER/A. HERRMANN
DESIGNER	DEZ/D. DRAGONY

DIMENSIONING AND TOLERANCING PER ASME Y14.5M-1994

???	SINGLE PART DRAWING
????	CHARTED PART DRAWING
C ?	COMMERCIAL PART
E ?	EXISTING PART

PDM REL LEVEL: Released PDM REVISION: -
PDM DATABASE:
MODEL NAME: 060213MFA830_TUN_START_BULLNOSE
CHECK FOR ANY OUTSTANDING ECO'S PRIOR TO USE

NATIONAL AERONAUTICS AND SPACE ADMINISTRATION
JOHN H. GLENN RESEARCH CENTER
LEWIS FIELD
CLEVELAND, OHIO

US-7 SEGMENT ASSEMBLY
060213MFA600

A830 TUNNEL FWD BULLNOSE ASSEMBLY

SIZE	DRAWING NUMBER	REV	BLDG	AREA
E	060213MFA830	-	50	HI BAY

UNITS INCH

SCALE:	INITIAL REL DATE	SHEET	DISCIPLINE
1/2 AND NOTED	02/21/2008	1 OF 1	MECHANICAL

PRO/E VERSION: Wildfire 2.0

SIZE E DRAWING NUMBER 060213MFA830 REV -

NAME:CMAUER CHECK:060213MFA600_TUN_START_BULLNOSE DATE:21-Feb-08 17:18:06