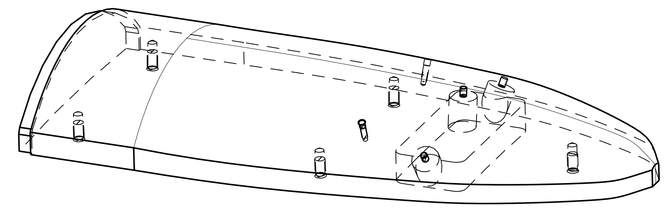

1. MATERIAL: 6061-T651 ALUMINUM PER SAE-AMS-QQ-A-250/11. CERTIFICATE OF CONFORMANCE REQUIRED.
2. 125 Ra ALL MACHINED SURFACES.
3. ELECTRONIC FILE WILL BE PROVIDED.
4. IDENTIFY PART BY ENGRAVING DRAWING PART NUMBER 060213MFA831 ON SPECIFIED SURFACE PER SAE-AS478, METHOD 3 (ZONE C8).
5. SURFACE TREATMENT PER MIL-C-5541E, CLASS 3. USE IRIDITE 14.2 OR REQUESTER APPROVED EQUAL PER MIL-DTL-81706B, CLASS 1A, FORM II, METHOD B OR C AS APPLICABLE. SPOT TOUCH UP BY METHOD B.
6. PLUG INDICATED INSTUMENTATION HOLES PRIOR TO PAINTING.
7. EXTERNAL SURFACES WITHIN INDICATED PAINT BOUNDARY: COAT WITH NATIONAL COATINGS AcrySheild HIGH REFLECTIVE A590 (WHITE) TOPCOAT FOLLOWING MANUFACTURERS SUGGESTED APPLICATION PROCEDURE. THE COATING THICKNESS SHALL BE 6-10 MILS (DRY) AS MEASURED PER ASTM-D7091.

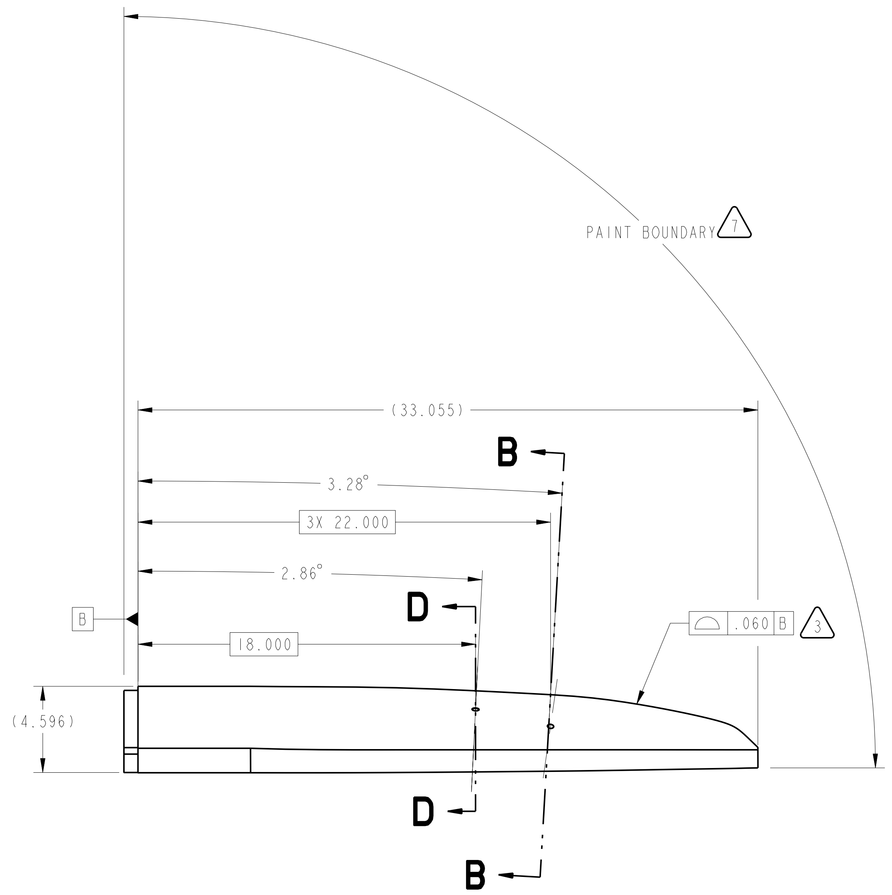

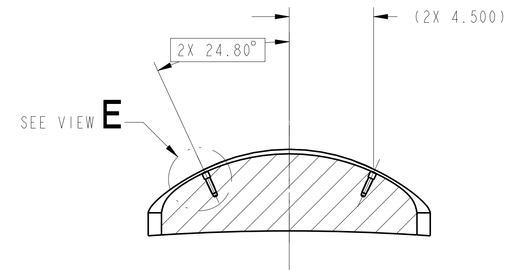

SECTION D-D
(LIFTING EYE HOLES)

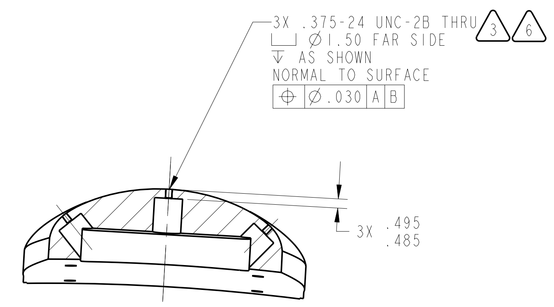

SECTION B-B

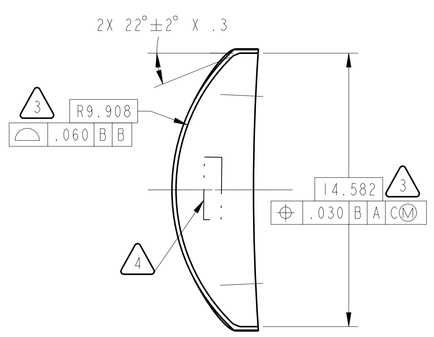

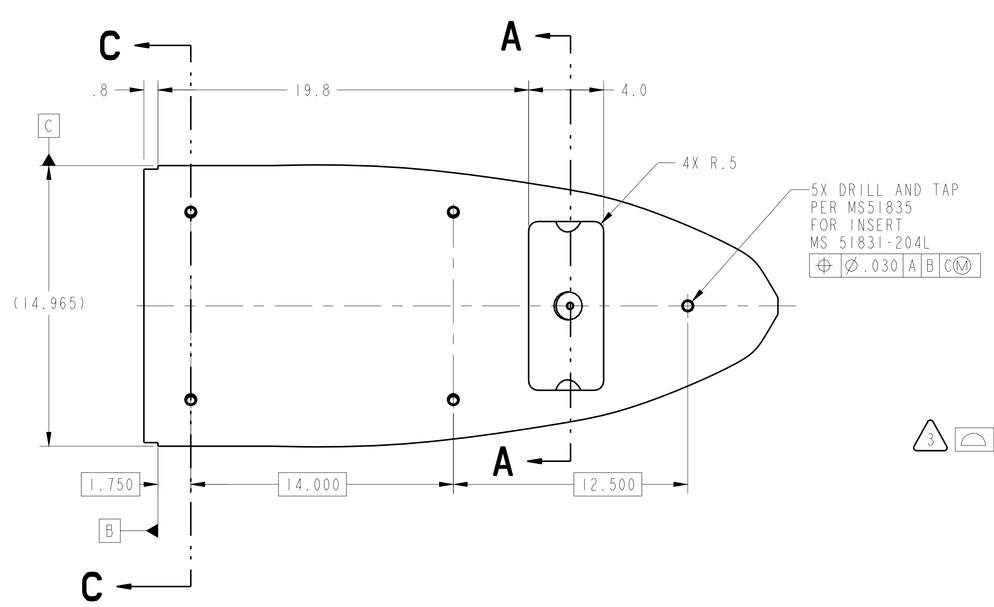

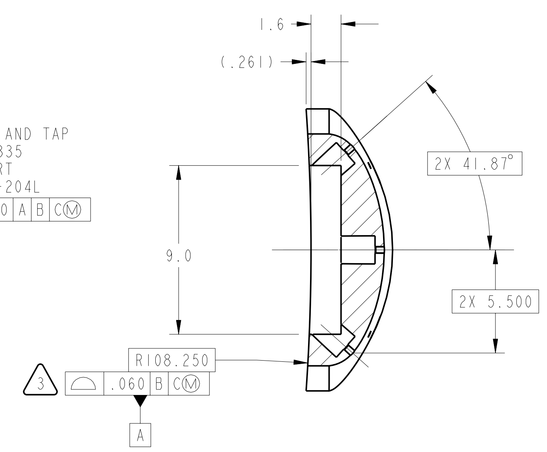

SECTION A-A

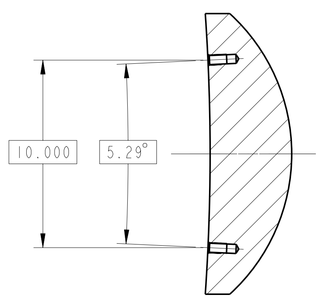

SECTION C-C

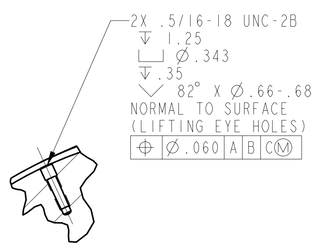

DETAIL E
SCALE 1/2

DATE/INITIAL	ECR	DEV	WAV	IMPLEMENTED

Released by AIX USS CMO on 2/22/08
For Procurement Use Only
DO NOT COPY

CHG	ZONE	DESCRIPTION	APP/DATE

REVISIONS

PRIOR TO USE VERIFY THE INTENDED PURPOSE IN PDM ("FOR" ATTRIBUTE)

UNLESS OTHERWISE SPECIFIED DIMENSIONS ARE IN INCHES

CONTRACT -
CONTRACTOR -

TOLERANCE ON		TASK ORDER	
.X	± 0.03	DRAFTER	DEZ/D. DRAGONY
.XX	± 0.01	ENGINEER	DER/A. HERRMAN
.XXX	± -	DESIGNER	DEZ/D. DRAGONY
FRACTION	± -		
ANGULAR	± 0.50°		
BREAK EDGES	.01-.02		

DIMENSIONING AND TOLERANCING PER ASME Y14.5M-1994

NATIONAL AERONAUTICS AND SPACE ADMINISTRATION
JOHN H. GLENN RESEARCH CENTER
LEWIS FIELD
CLEVELAND, OHIO

US-7 SEGMENT ASSEMBLY

060213MFA600

A831 TUNNEL FWD BULLNOSE

PDM REL LEVEL: Released PDM REVISION: -
PDM DATABASE:
MODEL NAME: 060213MFA831_TUN_START_BULLNOSE
CHECK FOR ANY OUTSTANDING ECO'S PRIOR TO USE

SIZE	DRAWING NUMBER	REV	BLDG	AREA
E	060213MFA831	-	50	HI BAY

UNITS: INCH

SCALE:	INITIAL REL DATE	SHEET	DISCIPLINE
1/4	02/21/2002	1 OF 1	MECHANICAL

PRO/E VERSION: Wildfire 2.0

SIZE E DRAWING NUMBER 060213MFA831 REV -

NAME:CRAIGER CHECK:060213MFA831_TUN_START_BULLNOSE DATE:21-Feb-02 17:19:12