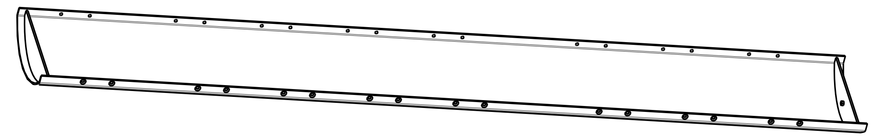

SCALE 1/10

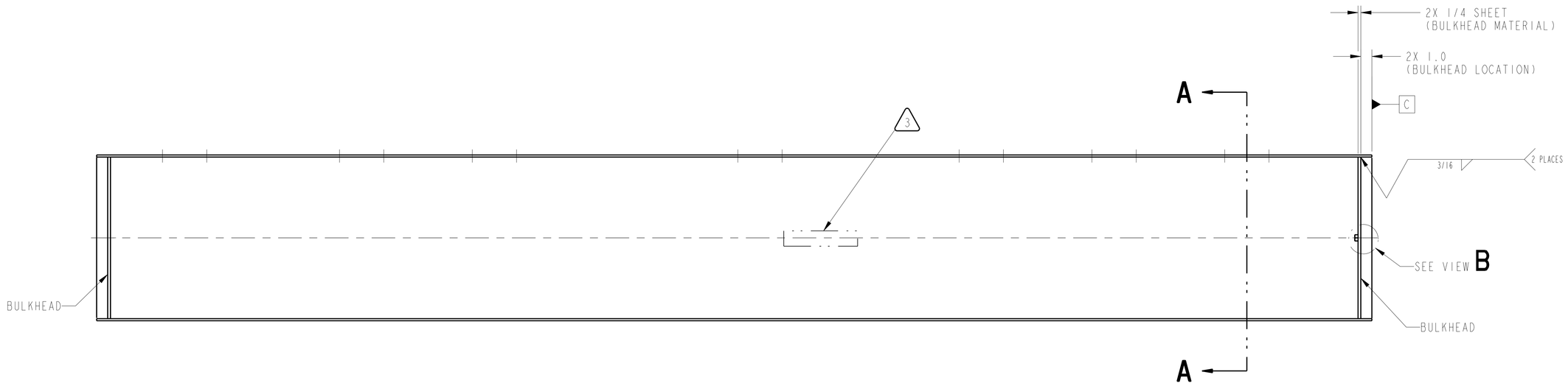

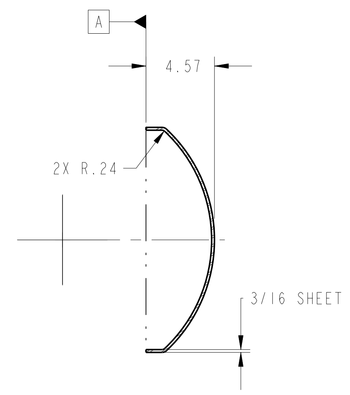

SECTION A-A
BULKHEAD REMOVED
FOR CLARITY

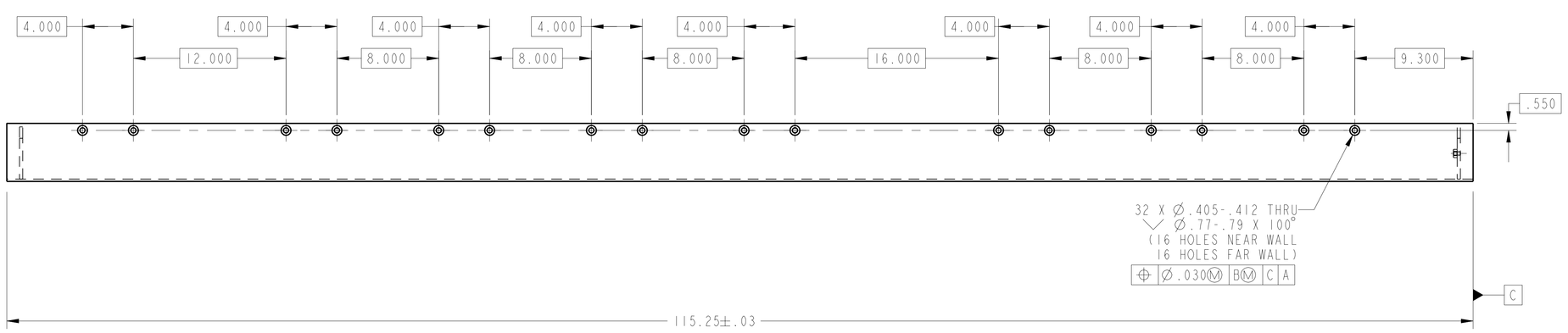

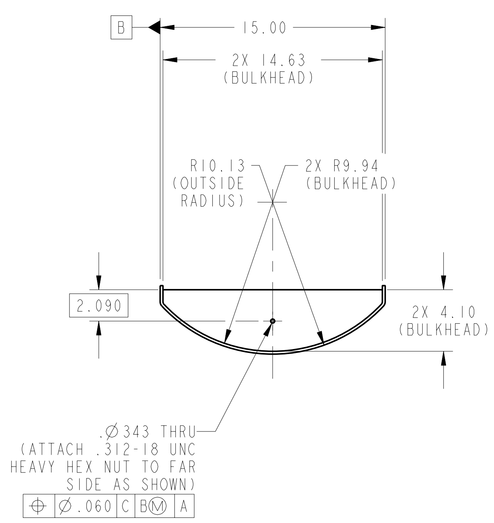

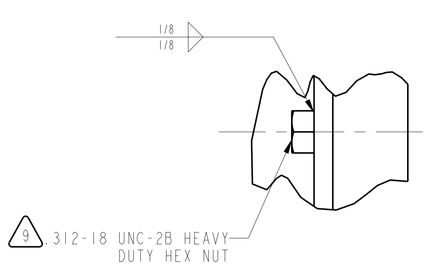

DETAIL B
SCALE 1/1
(LIFTING EYE HOLE)

1. MATERIAL: ASTM A36 STEEL. CERTIFICATE OF CONFORMANCE REQUIRED.
2. 125 Ra ALL MACHINED SURFACES.
3. ENGRAVE DRAWING PART NUMBER 060213MFA837 ON SPECIFIED SURFACE, PER SAE-AS478, METHOD 2A2. (ZONE F5)
4. ALL WELD JOINTS SHALL BE CLASSIFIED AS INDICATED IN THE WELD SYMBOL AND BE SUBJECTED TO VISUAL WELD EXAMINATION AND THEIR CORRESPONDING WELD CLASS NONDESTRUCTIVE TESTING (NDT) REQUIREMENTS IN ACCORDANCE WITH GRC-ARES-1-X-REQ-061 AEROSPACE WELDING REQUIREMENTS.
5. ALL WELDING SHALL BE PERFORMED USING A QUALIFIED WELDING PROCEDURE SPECIFICATION (WPS) PER AWS D1.1.
6. ALL WELDING SHALL BE PERFORMED USING WELD FILLER MATERIALS THAT MEET EITHER E71T-1M ELECTRODE REQUIREMENTS PER AWS A5.20, "SPECIFICATION FOR CARBON STEEL ELECTRODES FOR FLUX-CORED ARC WELDING (FCAW)" USING THE FCAW PROCESS, MEET ER70S-3 ELECTRODE (SOLID) PER AWS 5.18, "SPECIFICATION FOR CARBON STEEL ELECTRODES AND RODS FOR GAS SHIELDED ARC WELDING" USING THE GAS METAL ARC WELDING (GMAW) PROCESS, OR MEET ER70S-2 OR ER70S-3 FILLER ROD (SOLID) PER AWS 5.18, "SPECIFICATION FOR CARBON STEEL ELECTRODES AND RODS FOR GAS SHIELDED ARC WELDING" USING THE GAS TUNGSTEN ARC WELDING (GTAW) PROCESS.
7. WELD SYMBOLS SHALL BE PER AWS A2.4, "STANDARD SYMBOLS FOR WELDING, BRAZING, AND NONDESTRUCTIVE EXAMINATION" AS SHOWN IN THE GRC EDD DRAFTING STANDARDS AND GUIDELINES.
8. UTILIZE WELD ACCEPTANCE CRITERIA FOR THE SPECIFIC NDT METHOD IN ACCORDANCE WITH GRC-ARES-1-X-REQ-061.
9. HEX NUTS MUST BE PER ANSI/ASME-B18.2.2, GRADE 2 STEEL, PLAIN FINISH.
10. ALL WELD ARE FILLET WELD WITH A CLASS (B) DESIGNATION AS PER GRC-ARES-1-X-REQ-061.
11. CLEAN ALL SURFACES PER ASTM D-609.
12. COAT THE ENTIRE PART WITH NATIONAL COATINGS RustShield A120 (BUFF) PRIMER FOLLOWING MANUFACTURERS SUGGESTED APPLICATION PROCEEDURE. THE COATING THICKNESS SHALL BE 1-3 MILS (DRY) PER ASTM-D7091.

DATE / INITIAL	ECR	DEV	WAV	ECR IMPLEMENTED QA SIGNATURE/DATE

Released by AIX USS CMO on 2/29/08
For Procurement Use Only
DO NOT COPY

CHG	ZONE	DESCRIPTION	APP/DATE

REVISIONS

PRIOR TO USE VERIFY THE INTENDED PURPOSE IN PDM ("FOR" ATTRIBUTE)

UNLESS OTHERWISE SPECIFIED DIMENSIONS ARE IN INCHES

CONTRACT
CONTRACTOR
TASK ORDER

TOLERANCE ON			
.X	± 0.03	DRAFTER	DEZ/D. DRAGONY
.XX	± 0.01	ENGINEER	DER/A. HERRMAN
.XXX	± 0.005	DESIGNER	DER/A. HERRMAN
FRACTION	± -		
ANGULAR	± 0.50°		
BREAK EDGES	.02-.03		

DIMENSIONING AND TOLERANCING PER ASME Y14.5M-1994

NATIONAL AERONAUTICS AND SPACE ADMINISTRATION
JOHN H. GLENN RESEARCH CENTER
LEWIS FIELD
CLEVELAND, OHIO

US-2 SEGMENT ASSEMBLY

060213MFA350

A837 SYSTEMS TUNNEL LONG WELDMENT

PDM REL LEVEL: Released PDM REVISION: -
PDM DATABASE:
MODEL NAME: 060213MFA837_SYS_TUN_LONG_WELD
CHECK FOR ANY OUTSTANDING ECO'S PRIOR TO USE

SIZE	DRAWING NUMBER	REV	BLDG	AREA
E	060213MFA837	-	50	HI BAY

UNITS: INCH

SCALE:	INITIAL REL DATE	SHEET	DISCIPLINE
1/5 AND NOTED	02/21/2008	1 OF 1	MECHANICAL

PRO/E VERSION: Wildfire 2.0

SIZE E DRAWING NUMBER 060213MFA837 REV. - A

NAME/NUMBER OBRECHT06061/060213MFA837_SYS_TUN_LONG_WELD DATE24-Feb-2 1321:13