DRAWING LIST

DRAWING NUMBER: DRAWING CODE	DRAWING NUMBER: BALLOON NO	DESCRIPTION	QTY/ ASSY
060213MFA855		TUNNEL AFT BULLNOSE ASSEMBLY	1
060213MFA365		KULITE INSERT	1
060213MFA366		INSERT SPACER	1
060213MFA856		TUNNEL AFT BULLNOSE	1

COMMERCIAL PARTS LIST

BALLOON NO	DESCRIPTION	QTY/ ASSY
C1	INSERT, SCREW-THREAD, LOCKING, KEY LOCKED, HEAVY DUTY, MS51831-109(L), (MATERIAL: TYPE 302/303 STAINLESS STEEL), (FOR .375-24 FASTENER)	3
C2	KULITE TRANSDUCER, XTL-186A-190, ESD (ELECTROSTATIC DISCHARGE) SENSITIVE.	1

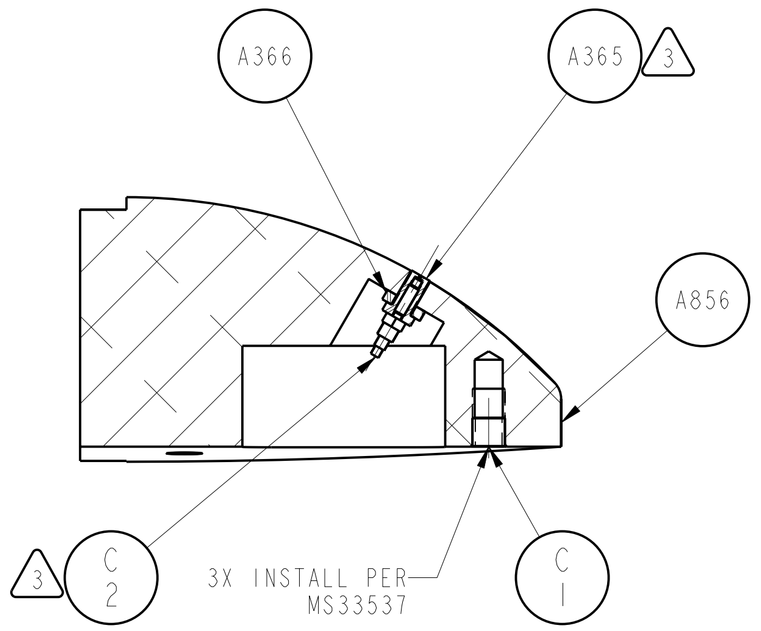

SECTION **A-A**

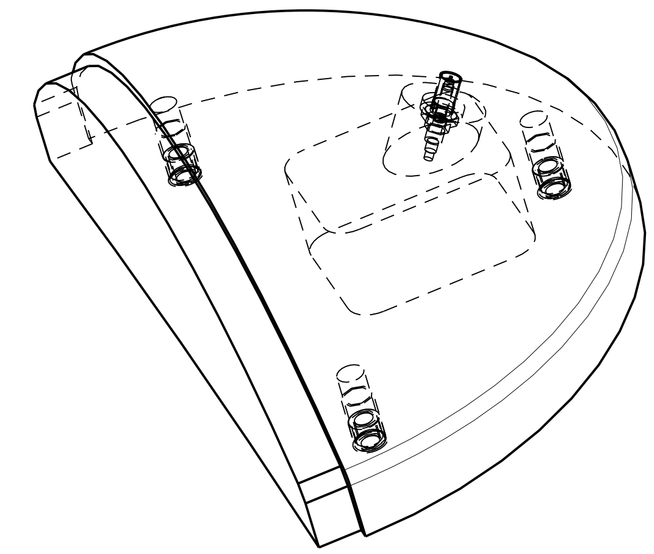

1. REFER TO GRC-ARES IX-FAB-100, DEVELOPMENT FLIGHT INSTRUMENTATION (DFI) SENSOR PROCEDURE FOR ADDITIONAL INFORMATION.
2. SEE DWG. NO. 060213MFA810 FOR KULITE INSTALL ASSEMBLY.
3. CLEAN AND PRIME MATING THREADED SUFACES WITH LOCKTITE #7649 PRIMER "N" OR #7471 PRIMER "T" THEN APPLY LOCKTITE THREADLOCKER 272 PER MANUFACTURERS DIRECTIONS.
4. APROXIMATE WEIGHT 26 LBS.

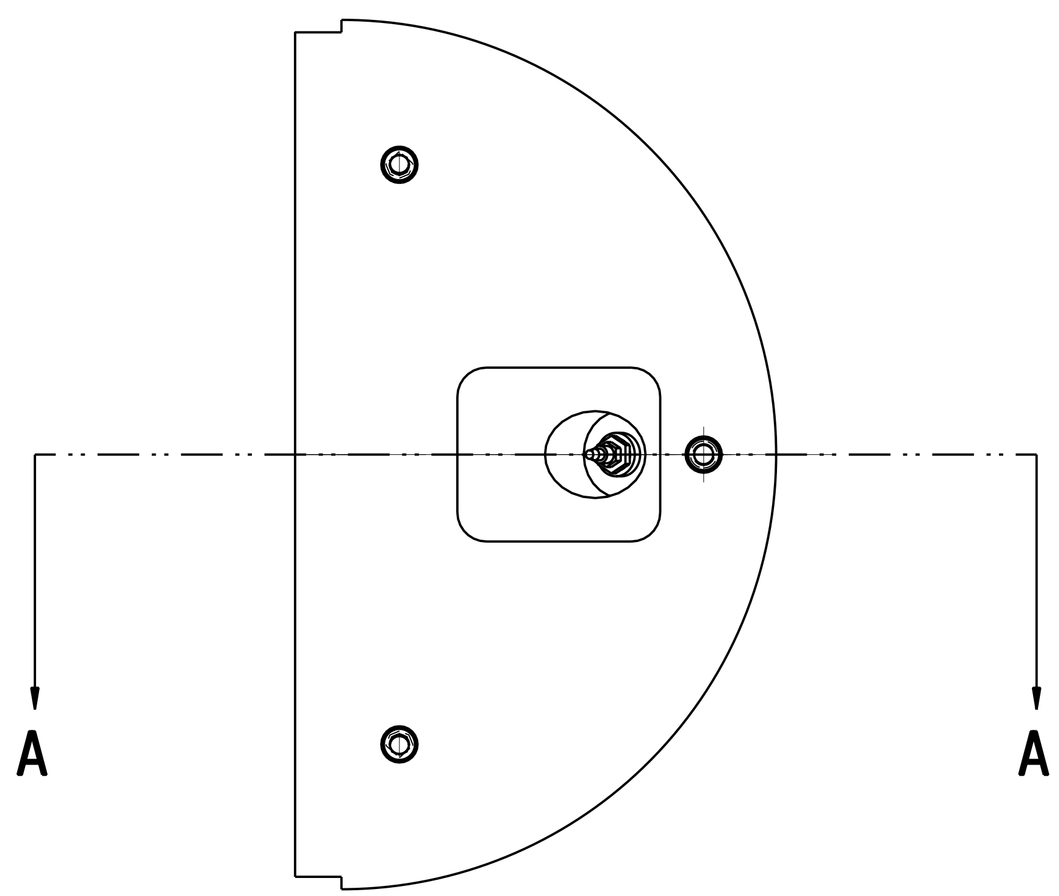

DATE / INITIAL	ECR	DEV	WAV	ECR IMPLEMENTED / QA SIGNATURE/DATE

Released by AIX USS CMO on 2/29/08
For Procurement Use Only
DO NOT COPY

CHG	ZONE	DESCRIPTION	APP/DATE

REVISIONS

PRIOR TO USE VERIFY THE INTENDED PURPOSE IN PDM ("FOR" ATTRIBUTE)

UNLESS OTHERWISE SPECIFIED DIMENSIONS ARE IN INCHES

CONTRACT
CONTRACTOR

TOLERANCE ON		TASK ORDER	
.X	± -	DRAFTER	DEZ/D. DRAGONY
.XX	± -	ENGINEER	DER/A. HERRMAN
.XXX	± -	DESIGNER	DEZ/D. DRAGONY
FRACTION	± -		
ANGULAR	± -		
BREAK EDGES -			

DIMENSIONING AND TOLERANCING PER ASME Y14.5M-1994

????	SINGLE PART DRAWING
????-?	CHARTED PART DRAWING
C ?	COMMERCIAL PART
E ?	EXISTING PART

PDM REL LEVEL: Released PDM REVISION: -
PDM DATABASE:
MODEL NAME: 060213MFA855_US-1_BULLNOSE
CHECK FOR ANY OUTSTANDING ECO'S PRIOR TO USE

NATIONAL AERONAUTICS AND SPACE ADMINISTRATION
JOHN H. GLENN RESEARCH CENTER
LEWIS FIELD
CLEVELAND, OHIO

US-1 SEGMENT ASSEMBLY
060213MF300

A855 TUNNEL AFT BULLNOSE ASSEMBLY

SIZE	DRAWING NUMBER	REV	BLDG	AREA
D	060213MFA855	-	50	HI BAY

UNITS: INCH

SCALE:	INITIAL REL DATE	SHEET	DISCIPLINE
1/2	02/21/2008	1 OF 1	MECHANICAL

PRO/E VERSION: Wildfire 2.0

SIZE D DRAWING NUMBER 060213MFA855 REV -

NAME:CBLASER OBJECT:060213MFA855_TUNNEL_END_BULLNOSE DATE:21-Feb-08 17:25:46