1. MATERIAL: 6061-T651 ALUMINUM PER SAE-AMS-QQ-A-250/11. CERTIFICATE OF CONFORMANCE REQUIRED.
2. 125 Ra ALL MACHINED SURFACES.
3. ELECTRONIC FILE WILL BE PROVIDED.
4. IDENTIFY PART BY ENGRAVING DRAWING PART NUMBER 060213MFA856 ON SPECIFIED SURFACE PER SAE-AS478, METHOD 3 (ZONE B8).
5. SURFACE TREATMENT PER MIL-C-5541E, CLASS 3. USE IRIDITE 14.2 OR REQUESTER APPROVED EQUAL PER MIL-DTL-81706B, CLASS 1A, FORM 11, METHOD B OR C AS APPLICABLE. SPOT TOUCH UP BY METHOD B.
6. PLUG SPECIFIED INSTRUMENTATION HOLES PRIOR TO PAINTING.
7. EXTERNAL SURFACES WITHIN INDICATED PAINT BOUNDARY: COAT WITH NATIONAL COATINGS AcrySheild HIGH REFLECTIVE A590 (WHITE) TOPCOAT FOLLOWING MANUFACTURERS SUGGESTED APPLICATION PROCEDURE. THE COATING THICKNESS SHALL BE 6-10 MILS (DRY) AS MEASURED PER ASTM-D7091.

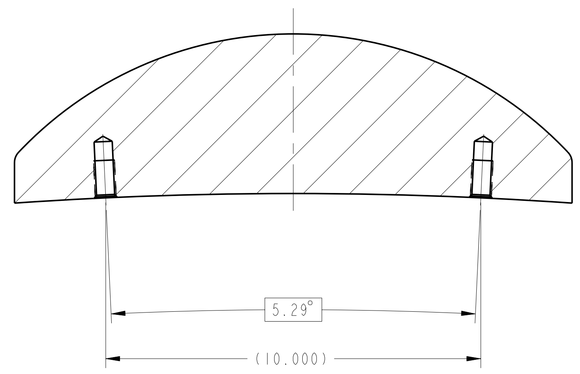

SECTION B-B

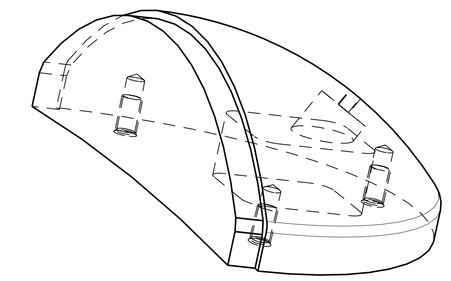

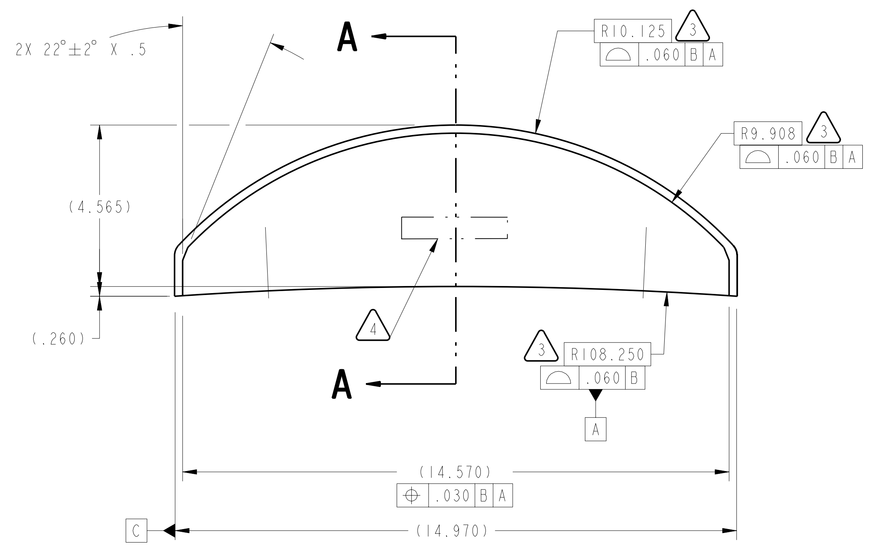

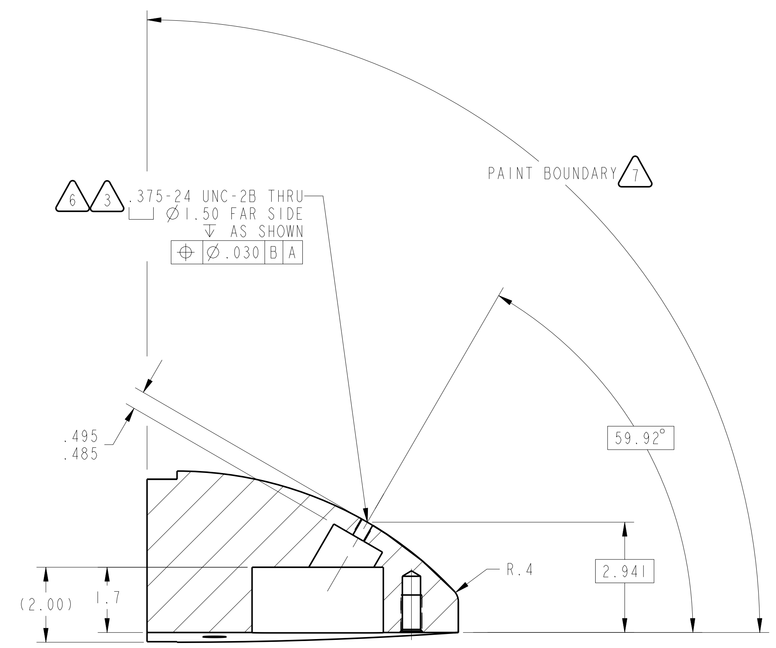

SECTION A-A

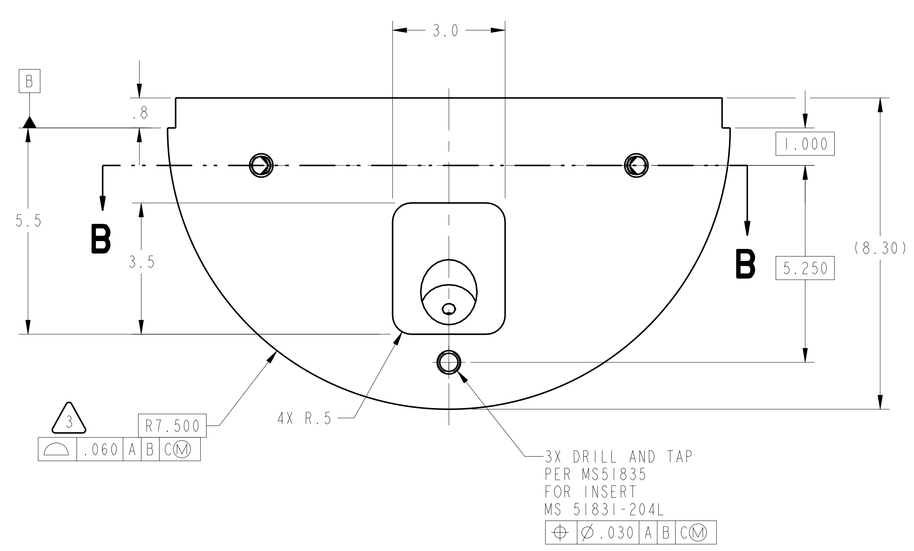

DATE / INITIAL	ECR	DEV	WAV	ECR IMPLEMENTED QA SIGNATURE/DATE

Released by AIX USS CMO on 2/29/08
For Procurement Use Only
DO NOT COPY

CHG	ZONE	DESCRIPTION	APP/DATE

REVISIONS

PRIOR TO USE VERIFY THE INTENDED PURPOSE IN PDM ("FOR" ATTRIBUTE)

UNLESS OTHERWISE SPECIFIED DIMENSIONS ARE IN INCHES

CONTRACT
CONTRACTOR
TASK ORDER

TOLERANCE ON			
.X	±0.03	DRAFTER	DEZ/D. DRAGONY
.XX	± 0.01	ENGINEER	DES/A. HERRMAN
.XXX	± -	DESIGNER	DEZ/D. DRAGONY
FRACTION	± -	DIMENSIONING AND TOLERANCING PER ASME Y14.5M-1994	
ANGULAR	± 0.50°		
BREAK EDGES	.01-.02		

PDM REL LEVEL: Released PDM REVISION: -
PDM DATABASE:
MODEL NAME: 060213_US-1_BULLNOSE
CHECK FOR ANY OUTSTANDING ECO'S PRIOR TO USE

NATIONAL AERONAUTICS AND SPACE ADMINISTRATION
JOHN H. GLENN RESEARCH CENTER
LEWIS FIELD
CLEVELAND, OHIO

TUNNEL END BULLNOSE
060213MFA855

A856 TUNNEL AFT BULLNOSE

SIZE	DRAWING NUMBER	REV	BLDG	AREA
E	060213MFA856	-	50	HI BAY

UNITS: INCH

SCALE:	INITIAL REL DATE	SHEET	DISCIPLINE
1/2	02/21/2008	1 OF 1	MECHANICAL

PRO/E VERSION: Wildfire 2.0

SIZE E DRAWING NUMBER 060213MFA856 REV -