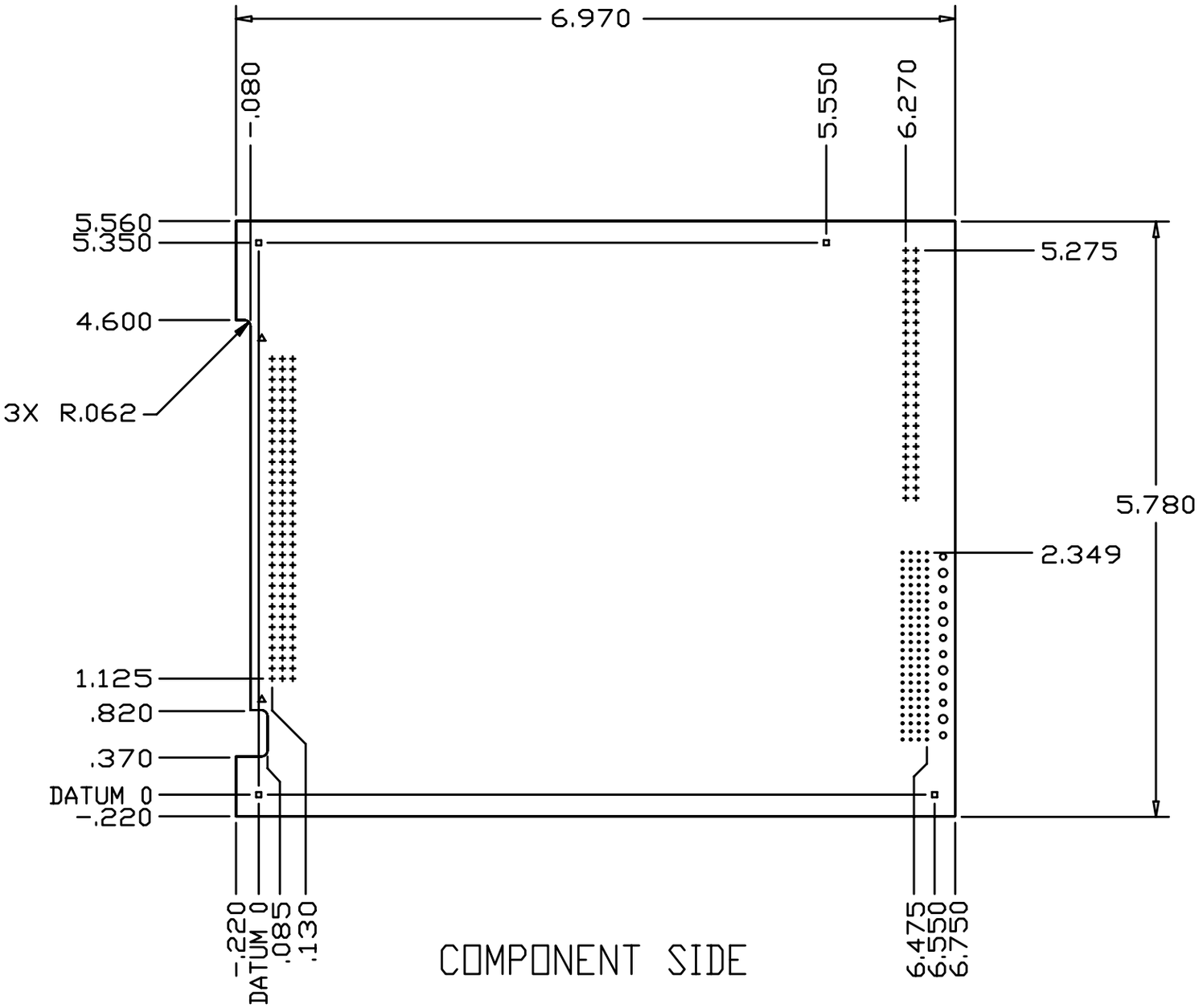

HOLE CHART	
SYM	DESCRIPTION
•	.025+.003 DIA
+	.035+.003 DIA
○	.060+.002 DIA
○	.081+.002 DIA
△	.106+.003 DIA
□	.125+.003 DIA