REVISIONS			
REV	DESCRIPTION	APPROVAL	REL DATE

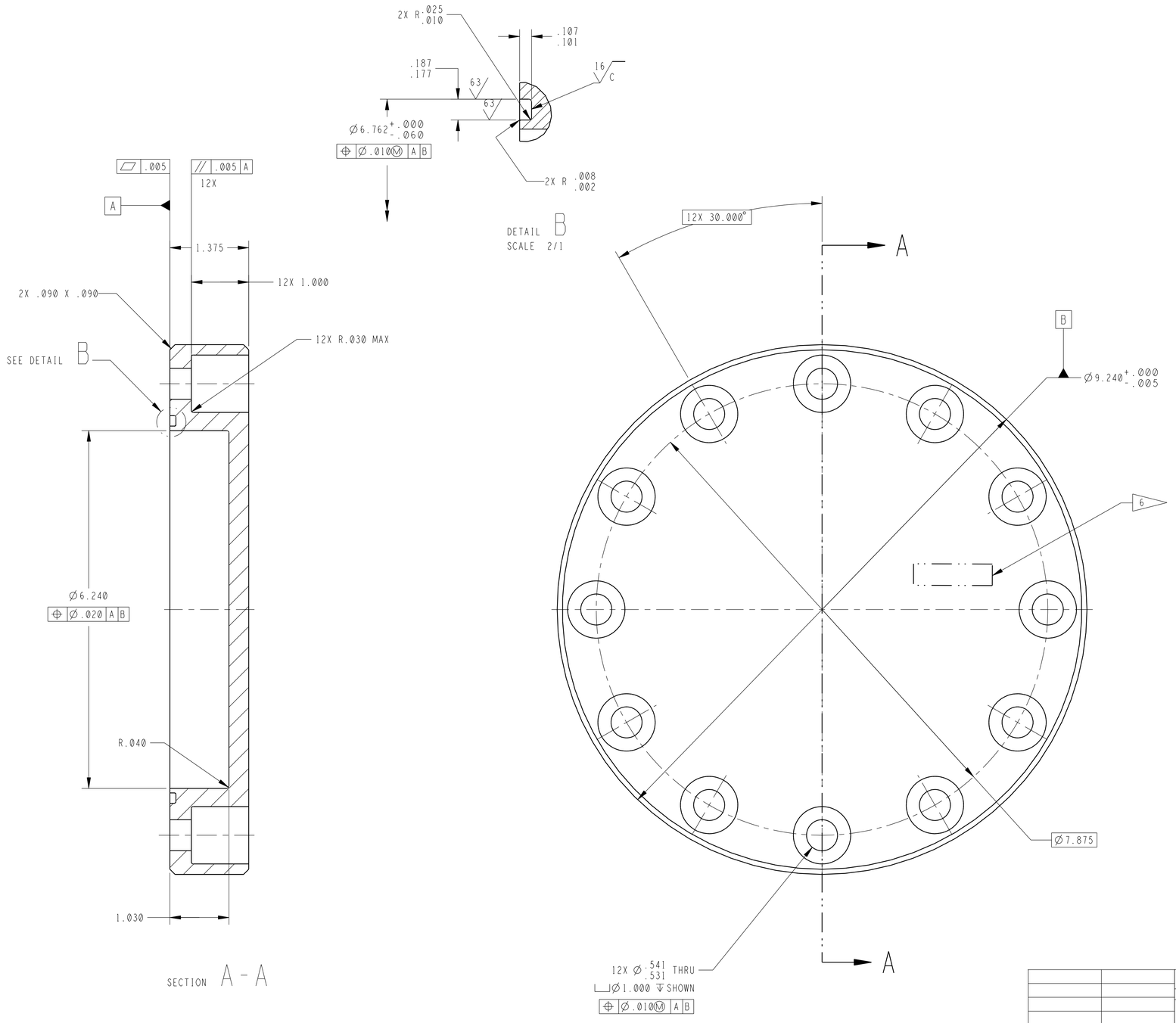

NOTES: (UNLESS OTHERWISE SPECIFIED)

1. GEOMETRIC DIMENSIONING AND TOLERANCING PER ASME Y14.5M-1994.
   - UNLESS SEPARATE TOLERANCES ARE SHOWN, PERFECT ORIENTATION AT MMC FOR RELATED FEATURES IS REQUIRED.
   - GENERAL ANGULAR TOLERANCE DOES NOT APPLY TO IMPLIED 90-DEGREE ANGLES.
2. MATERIAL: 304 CRES (UNS S30400) PER SAE AMS-QQ-S-763, CONDITION A, OR PER ASTM A240, ANNEALED.
3. 125 ALL MACHINED SURFACES.
4. REMOVE ALL BURRS AND BREAK SHARP EDGES.
5. PASSIVATE PER SAE AMS-QQ-P-35, TYPE VI.
6. IDENTIFY WITH INFORMATION SHOWN BELOW PER SAE AS478-7A OCR-A12 IN APPROXIMATE LOCATION SHOWN, ORIENTATION OPTIONAL. CONTROL SERIAL NUMBERS BEGINNING WITH 001.

   MED03054-1-XXX (WHERE XXX IS SERIAL NUMBER)
   REV X (WHERE X IS DRAWING REVISION; USE "-" FOR INITIAL RELEASE)
   MFR-XXXXX (WHERE XXXXX IS MANUFACTURER'S CAGE CODE)
7. CLEAN AND HANDLE FOR LOX SERVICE PER MSFC-SPEC-164, CLASS I, LEVEL A.

MED03054-1 SHOWN

MED03053	ALTAIR/PINTLE
NEXT ASSY	USED ON
APPLICATION (VERIFY IN RELEASE RECORDS)	
DRAWING STATE	-
DRAWING VERSION	-
DRAWING NAME	MED03054
DRAWING INFORMATION	

UNLESS OTHERWISE SPECIFIED DIMENSIONS ARE IN INCHES
TOLERANCES
DECIMALS .XX±.03 .XXX±.010
ANGLES ±.5°
MATERIAL 2
HEAT TREATMENT
FINISH 5

MODEL STATE	-
MODEL VERSION	-
MODEL NAME	MED03054
MODEL INFORMATION	

REV REL DATE	
ORIGINAL DRAWING APPROVALS	
DESIGN ORG.	ER34
DRAWN BY	D.RICE
ENGINEER	D.RICE
CHECKER	
MATERIALS	
STRESS	
S & MA	
PRODUC-MANUF	
PRODUC-FAB	
PRODUC-CONTR	R.LITCHFORD
DESN BRANCH CHF	A.HISSAM
RELEASE DATE	2008-07-25

GEORGE C. MARSHALL SPACE FLIGHT CENTER
NATIONAL AERONAUTICS AND SPACE ADMINISTRATION
HUNTSVILLE, ALABAMA

BLANK OFF PLATE, ABLATIVE LINER

SIZE	CODE	DRAWING NUMBER	REV
D	339B2	MED03054	-

SCALE 1/1 MASS (UNIT WEIGHT) 14.345 SHEET 1 OF 1

MSFC_DWG_D_FORMAT_REV(-) (MAY, 2008)