REVISIONS			
REV	DESCRIPTION	APPROVAL	REL DATE

NOTES: (UNLESS OTHERWISE SPECIFIED)

1. GEOMETRIC DIMENSIONING AND TOLERANCING PER ASME Y14.5M-1994.
   - UNLESS SEPARATE TOLERANCES ARE SHOWN, PERFECT ORIENTATION AT MMC FOR RELATED FEATURES IS REQUIRED.
   - GENERAL ANGULAR TOLERANCE DOES NOT APPLY TO IMPLIED 90-DEGREE ANGLES.
2. MATERIAL: 304 OR 304L CRES (UNS S30400 OR S30403) PER SAE AMS-QQ-S-763, CONDITION A, OR PER ASTM A240, ANNEALED, OR PER ASTM A511 (MECHANICAL TUBING).
3. 63 ALL MACHINED SURFACES.
4. REMOVE ALL BURRS AND BREAK SHARP EDGES.
5. PASSIVATE PER SAE AMS-QQ-P-35, TYPE VI.
6. IDENTIFY WITH INFORMATION SHOWN BELOW PER SAE AS478-7A OCR-A12 IN APPROXIMATE LOCATION SHOWN, ORIENTATION OPTIONAL. CONTROL SERIAL NUMBERS BEGINNING WITH 001.

   MED03052-Y-XXX (WHERE Y IS DASH NUMBER AND XXX IS SERIAL NUMBER)
   REV X (WHERE X IS DRAWING REVISION; USE "-" FOR INITIAL RELEASE)
   MFR-XXXXX (WHERE XXXXX IS MANUFACTURER'S CAGE CODE)
7. CLEAN AND HANDLE FOR LOX SERVICE PER MSFC-SPEC-164, CLASS I, LEVEL A.
8. SPECIFIED DIMENSIONS APPLY FOR MED03052-1 ONLY.

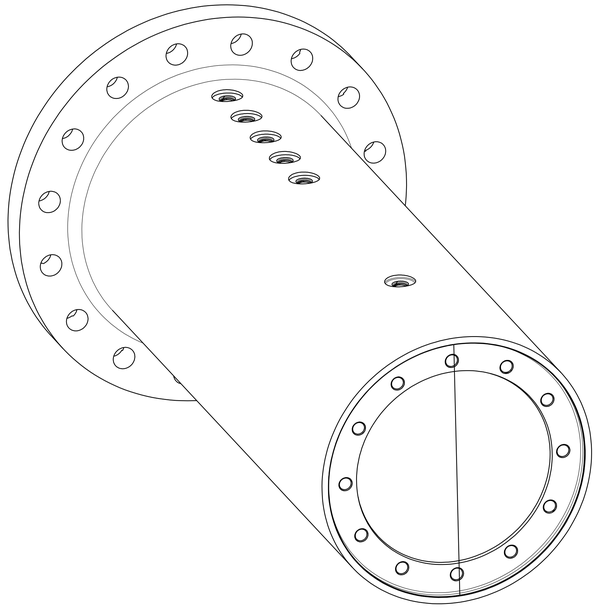

ISO VIEW
FOR REFERENCE ONLY

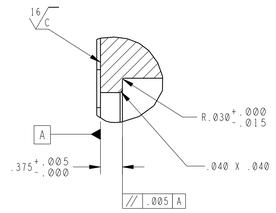

DETAIL C
SCALE 1/1

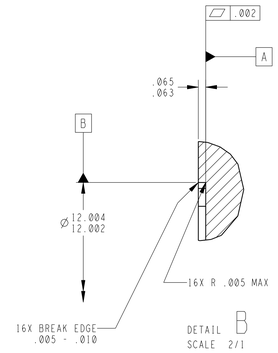

DETAIL B
SCALE 2/1

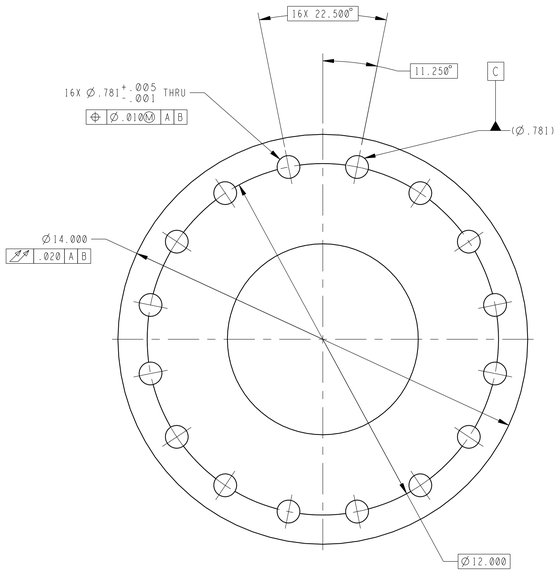

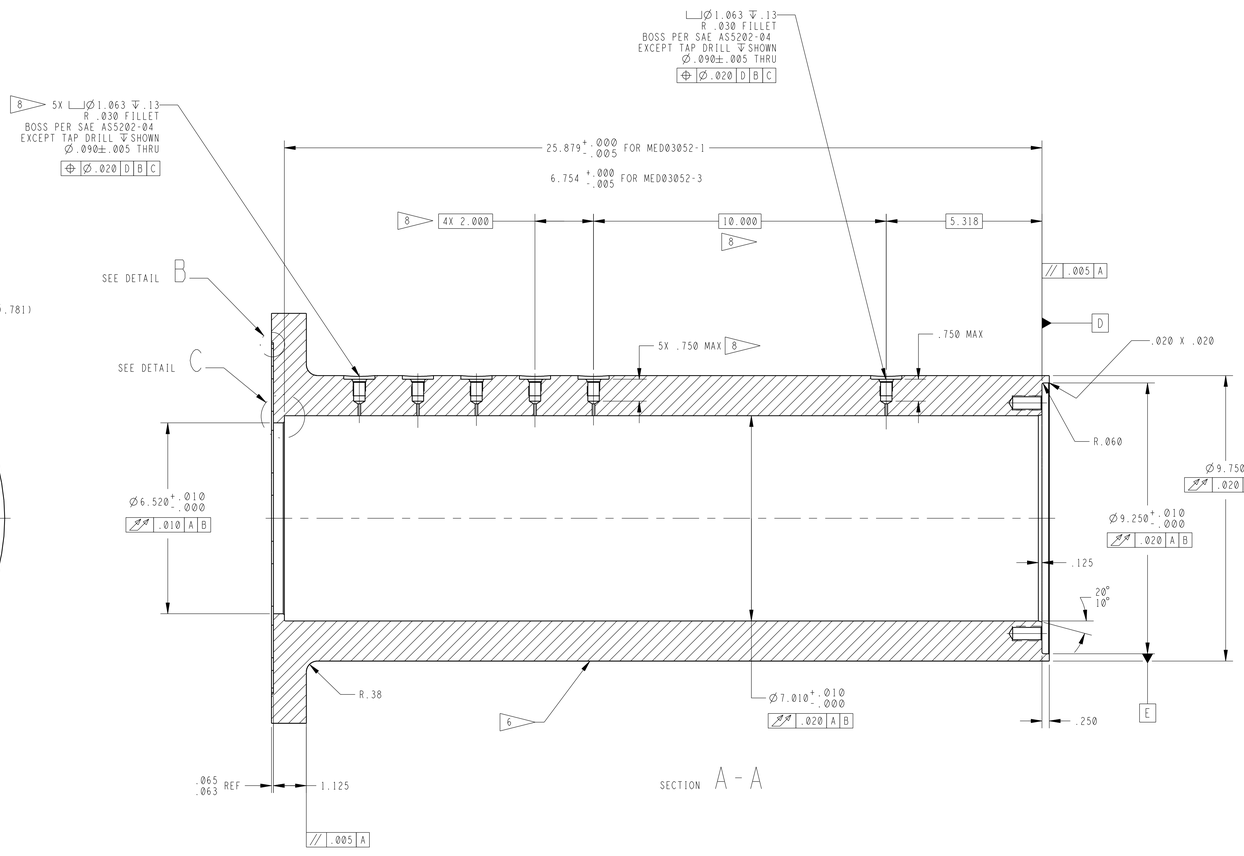

SECTION A - A

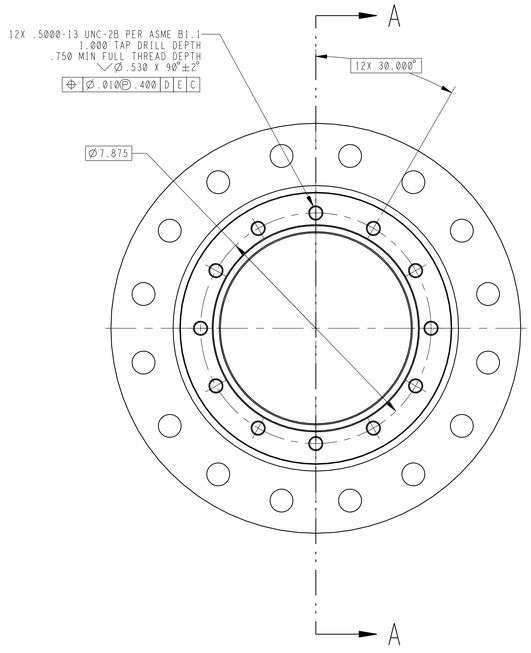

MED03052-3 NOTED
MED03052-1 SHOWN

MED03053	ALTAIR/PINTLE	MATERIAL	2
NEXT ASSY	USED ON	HEAT TREATMENT	
APPLICATION (VERIFY IN RELEASE RECORDS)		FINISH	5
DRAWING STATE	-	MODEL STATE	In Work
DRAWING VERSION	-	MODEL VERSION	1.25
DRAWING NAME	MED03052	MODEL NAME	OUTER.HOUSING.ABLATIVE.LINER
DRAWING INFORMATION		MODEL INFORMATION	

UNLESS OTHERWISE SPECIFIED DIMENSIONS ARE IN INCHES
TOLERANCES
DECIMALS X.X± .03, X.XX± .010
ANGLES ±.5°

ORIGINAL DRAWING APPROVALS	
REV REL DATE	
DESIGN ORG.	ER34
DRAWN BY	D.RICE
ENGINEER	D.RICE
CHECKER	
MATERIALS	
STRESS	
S & MA	
PRODUC-MANUF	
PRODUC-FAB	
PRODUC-CONTR	R.LITCHFORD
DESN BRANCH CHF	A.HISSAM
RELEASE DATE	2008-07-25

GEORGE C. MARSHALL SPACE FLIGHT CENTER
NATIONAL AERONAUTICS AND SPACE ADMINISTRATION
HUNTSVILLE, ALABAMA

OUTER HOUSING, ABLATIVE LINER

SIZE	CODE	DRAWING NUMBER	REV
E	339B2	MED03052	-

SCALE 1/2 MASS (UNIT WEIGHT) 298.131 SHEET 1 OF 1

MSFC.DWG.E.FORMAT.REV(-) (MAY, 2008)