REVISIONS			
REV	DESCRIPTION	APPROVAL	REL DATE

NOTES: (UNLESS OTHERWISE SPECIFIED)

1. GEOMETRIC DIMENSIONING AND TOLERANCING PER ASME Y14.5M-1994.
   - UNLESS SEPARATE TOLERANCES ARE SHOWN, PERFECT ORIENTATION AT MMC FOR RELATED FEATURES IS REQUIRED.
   - GENERAL ANGULAR TOLERANCE DOES NOT APPLY TO IMPLIED 90-DEGREE ANGLES.
2. MATERIAL: ALLOY STEEL 4130 (UNS G41300) PER SAE AMS 6370.
3. 125 ALL MACHINED SURFACES.
4. REMOVE ALL BURRS AND BREAK SHARP EDGES.
5. SPECIFIED FLATNESS AND DATUM "A" APPLY TO SURFACE OUTSIDE OF Ø2.950.
6. PRIOR TO WELDING, MACHINE A HOLE IN F/N 2 TO PRODUCE A DIAMETRAL INTERFERENCE OF .0018/.0006 WITH F/N 1. WELD PER MSFC-SPEC-560, CLASS V. ALL DIMENSIONS AND TOLERANCES APPLY AFTER WELDING.
7. BOTTOM OF SPOTFACE TO BE // .005 A .
8. PREFERRED OPTIONAL CONFIGURATION: PART MAY BE MACHINED FROM A SINGLE PIECE OF MATERIAL. MACHINE R .50 FILLET AT FILLET WELD LOCATION.
9. IDENTIFY WITH INFORMATION SHOWN BELOW PER SAE AS478-7A OCR-A12 IN APPROXIMATE LOCATION SHOWN, ORIENTATION OPTIONAL. CONTROL SERIAL NUMBERS BEGINNING WITH 001.

   MED03048-1-XXX (WHERE XXX IS SERIAL NUMBER)
   REV X (WHERE X IS DRAWING REVISION; USE "-" FOR INITIAL RELEASE)
   MFR-XXXXX (WHERE XXXXX IS MANUFACTURER'S CAGE CODE)
10. CLEAN AND DEGREASE PART PER GENERAL SHOP PRACTICE.

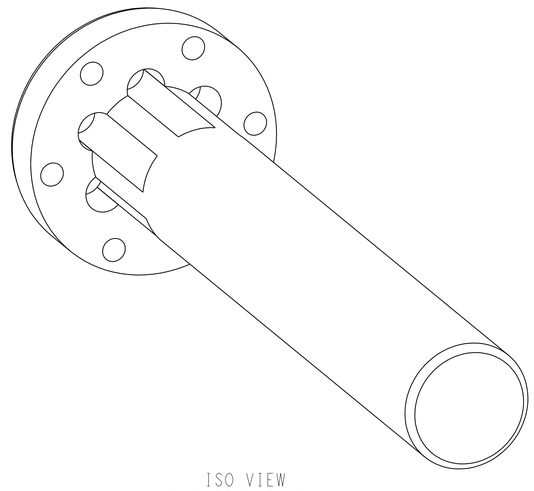

ISO VIEW
FOR REFERENCE ONLY

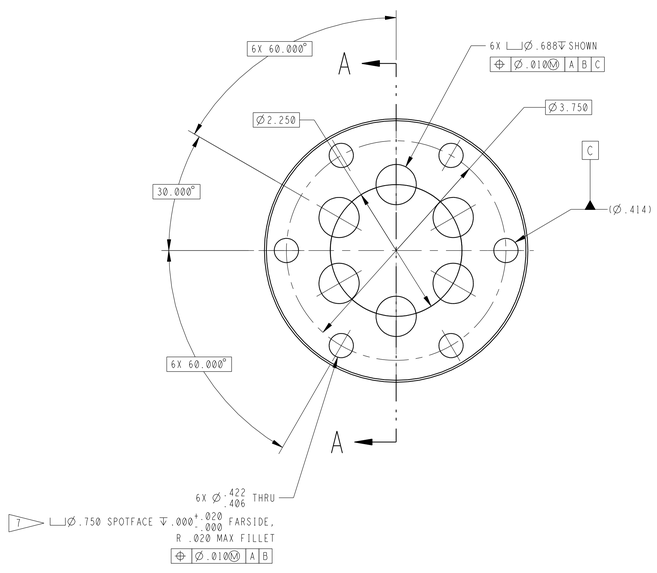

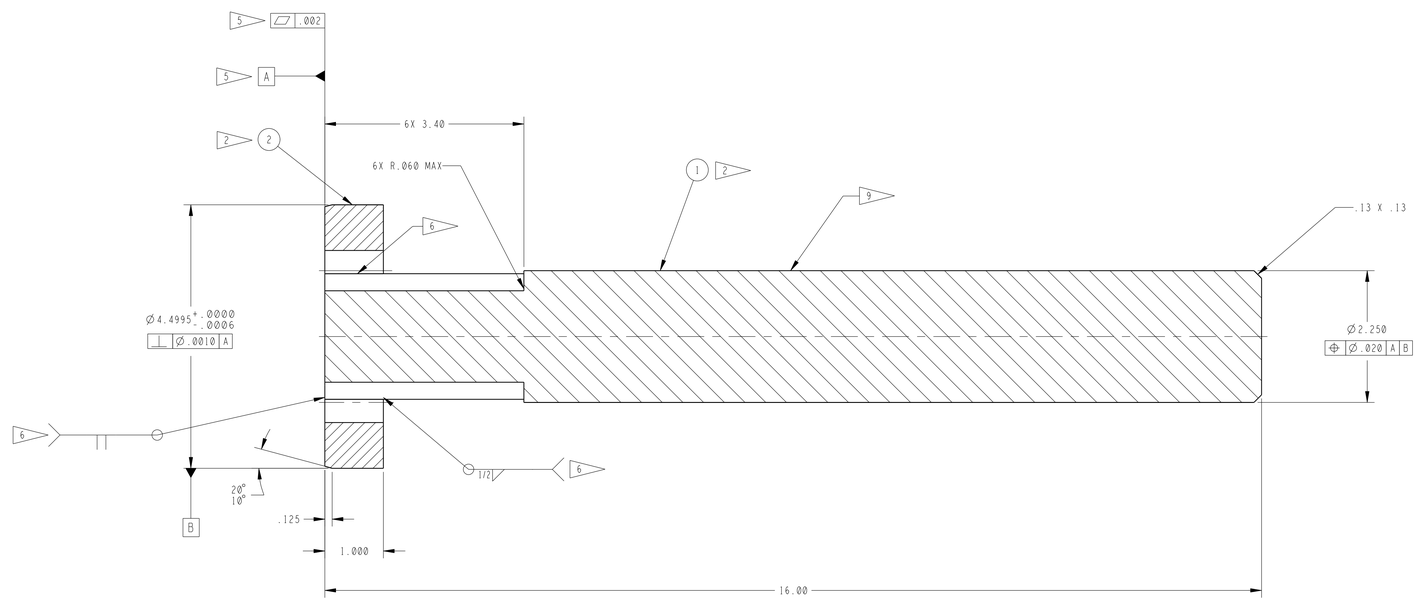

SECTION A - A

QTY REQ'D		FIND NO.	PART NUMBER	DWG REV	DESCRIPTION	MATERIAL (REF)
	1	2	MED03048-5		SHAFT EXTENSION PLATE	ALLOY STEEL 4130
	1	1	MED03048-3		SHAFT EXTENSION	ALLOY STEEL 4130
-	-	1				

ENGINEERING PARTS LIST

MED03048-5 SHOWN
MED03048-3 SHOWN
MED03048-1 ASSY SHOWN

UNLESS OTHERWISE SPECIFIED DIMENSIONS ARE IN INCHES		REV REL DATE	
TOLERANCES		ORIGINAL DRAWING APPROVALS	
DECIMALS .X±.01 .XXX±.010	ANGLES ±.5°	DESIGN ORG.	ER34
		DRAWN BY	D.RICE
		ENGINEER	D.RICE
MED03049	ALTAIR/PINTLE	CHECKER	
NEXT ASSY	USED ON	MATERIALS	
APPLICATION (VERIFY IN RELEASE RECORDS)		STRESS	
		S & MA	
DRAWING STATE	-	PRODUC-MANUF	
DRAWING VERSION	-	PRODUC-FAB	
DRAWING NAME	MED03048	PRODUC-CONTR	R.LITCHFORD
DRAWING INFORMATION	MODEL INFORMATION	DESN BRANCH CHF	A.HISSAM
		RELEASE DATE	2008-07-25

MATERIAL 2
HEAT TREATMENT
FINISH
MODEL STATE In Work
MODEL VERSION 1.13
MODEL NAME MET_EXTENSION_NOZZLE_END_ASSY

GEORGE C. MARSHALL SPACE FLIGHT CENTER
NATIONAL AERONAUTICS AND SPACE ADMINISTRATION
HUNTSVILLE, ALABAMA

SHAFT EXTENSION, NOZZLE END

SIZE	CODE	DRAWING NUMBER	REV
E	339B2	MED03048	-

SCALE 1/1 MASS (UNIT WEIGHT) 20.205 SHEET 1 OF 1

MSFC.DWG.E.FORMAT.REV(-) (MAY, 2008)