NOTICE - WHEN GOVERNMENT DRAWINGS, SPECIFICATIONS, OR OTHER DATA ARE USED FOR ANY PURPOSE OTHER THAN IN CONNECTION WITH A DEFINITELY RELATED GOVERNMENT PROCUREMENT OPERATION, THE UNITED STATES GOVERNMENT THEREBY INCURS NO RESPONSIBILITY NOR ANY OBLIGATION WHATSOEVER; AND THE FACT THAT THE GOVERNMENT MAY HAVE FORMULATED, FURNISHED, OR IN ANY WAY SUPPLIED THE SAID DRAWINGS, SPECIFICATIONS, OR OTHER DATA IS NOT TO BE REGARDED BY IMPLICATION OR OTHERWISE AS IN ANY MANNER LICENSING THE HOLDER OF ANY OTHER PERSON OR CORPORATION, OR CONVEYING ANY RIGHTS OR PERMISSION TO MANUFACTURE, USE, OR SELL ANY PATENTED INVENTION THAT MAY IN ANY WAY BE RELATED THERETO.

PART NO.	NF	ZONE	SYM	REVISIONS DESCRIPTION	DATE	APPROVAL

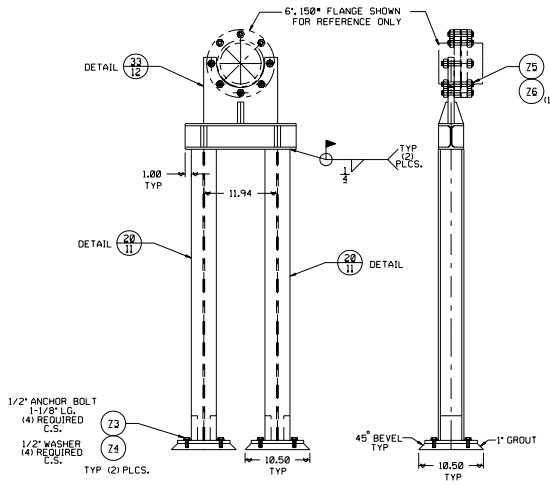

DETAIL 12/3

SCALE: 1:8_____

MAT'L: C.S.&_304L_SST_____

(3) REQUIRED

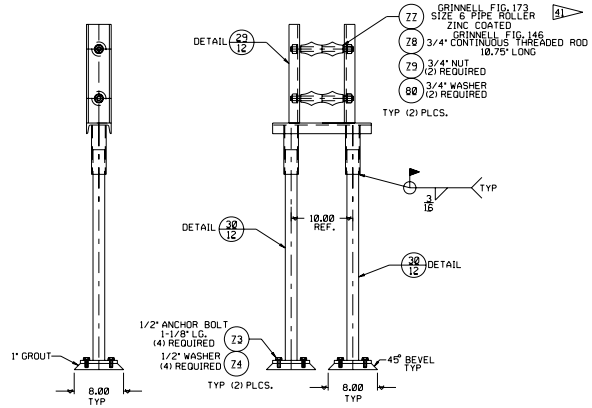

DETAIL 13/3

SCALE: 1:8_____

MAT'L: C.S._____

(16) REQUIRED

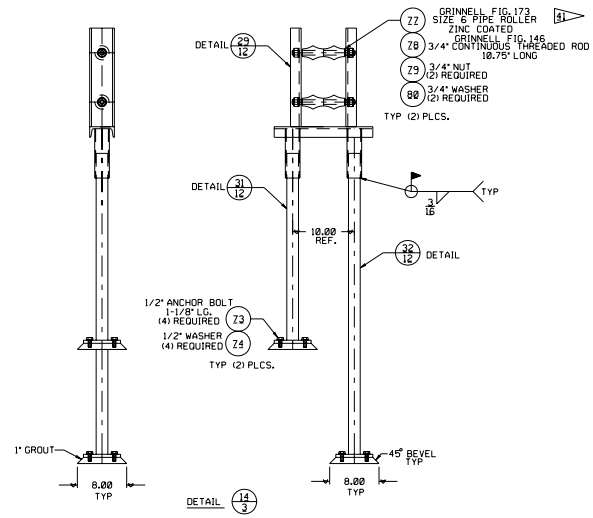

DETAIL 14/3

SCALE: 1:8_____

MAT'L: C.S._____

(14) REQUIRED

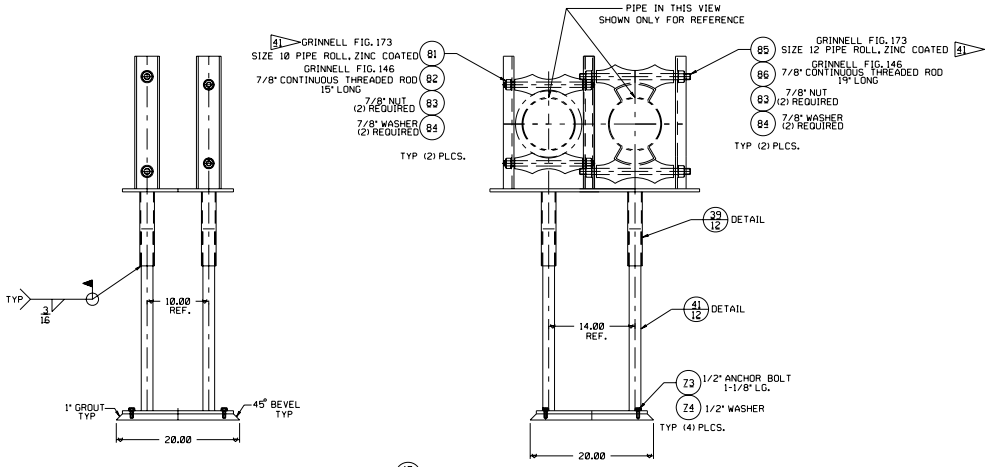

DETAIL 15/5

SCALE: 1:8_____

MAT'L: C.S._____

(2) REQUIRED

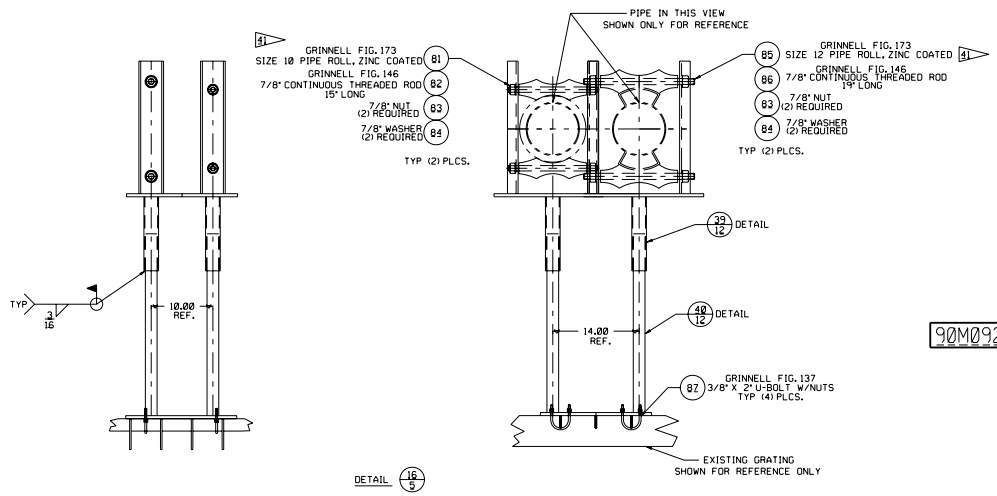

DETAIL 16/5

SCALE: 1:8_____

MAT'L: C.S._____

(3) REQUIRED

90M09265

SEE SHT1

SEE ENGINEERING RECORDS	UNLESS OTHERWISE SPECIFIED: DIMENSIONS ARE IN INCHES; TOLERANCES ON FRACTIONS ± 1/32, DECIMALS XX- ±.03, XXX- ±.010, ANGLES ± 1/2°; MATERIAL NOTED; HEAT TREATMENT NONE; FINAL PROTECTIVE FINISH NOTED	ORIGINAL DATE OF DRAWING 7-31-89; DRAFTSMAN RRK; CHECKER; CHECKER; STRESS; ENGINEER RRK; ENGINEER BRA; SUBMITTED; APPROVED	TECHNOLOGY TEST BED	GEORGE C. MARSHALL SPACE FLIGHT CENTER NATIONAL AERONAUTICS AND SPACE ADMINISTRATION HUNTSVILLE, ALABAMA	DESIGN CODE
NEXT ASSY	USED ON		LOX STORAGE FACILITY BUILDING 4670		
APPLICATION			WEIGHT CHECKER; DATE 7-10-89; CODE EI35; SCALE NOTED; UNIT WEIGHT	DWG SIZE E; 90M09265; SHEET 10 OF 14	