NOTICE - WHEN GOVERNMENT DRAWINGS, SPECIFICATIONS, OR OTHER DATA ARE USED FOR ANY PURPOSE OTHER THAN IN CONNECTION WITH A DEFINITELY RELATED GOVERNMENT PROCUREMENT OPERATION, THE UNITED STATES GOVERNMENT THEREBY INCURS NO RESPONSIBILITY NOR ANY OBLIGATION WHATSOEVER; AND THE FACT THAT THE GOVERNMENT MAY HAVE FORMULATED, FURNISHED, OR IN ANY WAY SUPPLIED THE SAID DRAWINGS, SPECIFICATIONS, OR OTHER DATA IS NOT TO BE REGARDED BY IMPLICATION OR OTHERWISE AS IN ANY MANNER LICENSING THE HOLDER OR ANY OTHER PERSON OR CORPORATION, OR CONFERRING ANY RIGHTS OR PERMISSION TO MANUFACTURE, USE, OR SELL ANY PATENTED INVENTION THAT MAY IN ANY WAY BE RELATED THERETO.

PART NO.	REF	REVISIONS			
		ZONE	SYM	DESCRIPTION	DATE	APPROVAL
			-		- - -

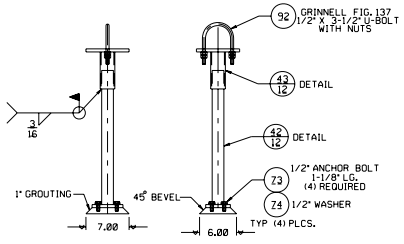

DETAIL 54/5

SCALE: 1:8_____

MAT'L: C.S.....

(2) REQUIRED

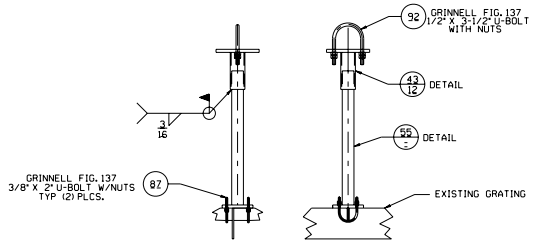

DETAIL 44/5

SCALE: 1:8_____

MAT'L: C.S.....

(5) REQUIRED

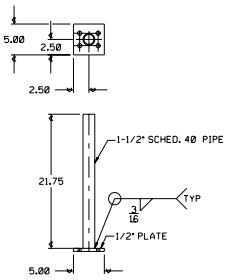

DETAIL 55/- 44

SCALE: 1:8_____

MAT'L: C.S.....

(5) REQUIRED

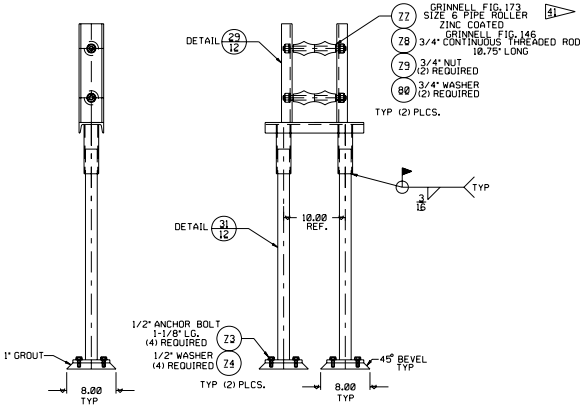

DETAIL 52/3

SCALE: NONE____

MAT'L: C.S.....

(4) REQUIRED

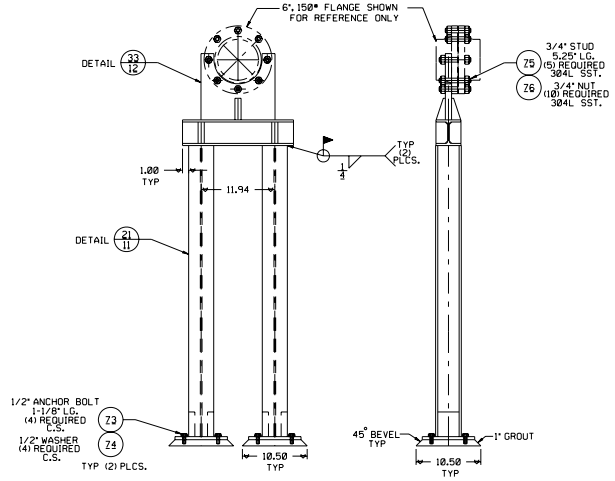

DETAIL 53/3

SCALE: NONE____

MAT'L: C.S.&_304L_SST.....

(1) REQUIRED

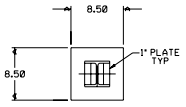

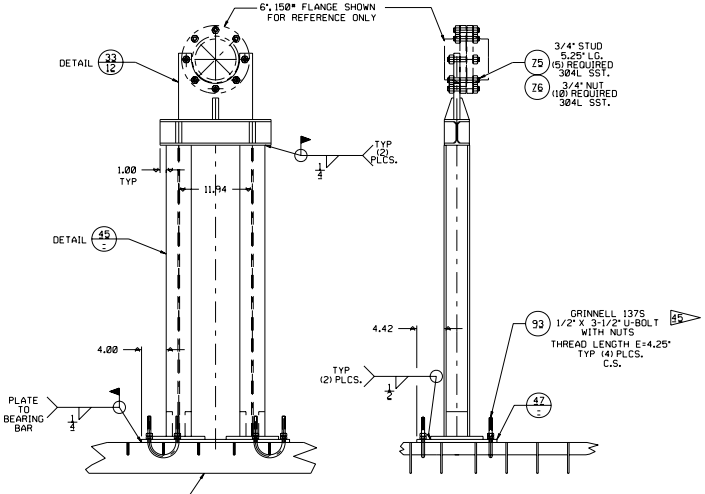

DETAIL 46/3

SCALE: 1:8_____

MAT'L: C.S.&_304L_SST.....

(2) REQUIRED

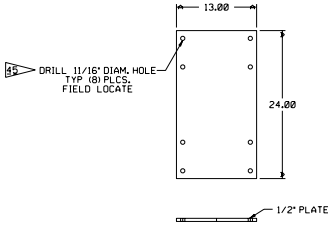

DETAIL 47/14

SCALE: 1:8_____

MAT'L: C.S.....

(1) REQUIRED

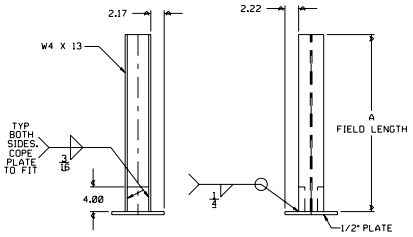

DETAIL 45/- A=47.21 + 3.80 FIELD FIT = 51.00

SCALE: NONE____

MAT'L: C.S.....

(2) REQUIRED

90M09265

SEE SHT1

SEE ENGINEERING RECORDS	UNLESS OTHERWISE SPECIFIED DIMENSIONS ARE IN INCHES TOLERANCES ON FRACTIONS ± 1/32 DECIMALS XX- ±.03 XXX- ±.010 ANGLES ± 1/2°	ORIGINAL DATE OF DRAWING 7-31-89 DRAFTSMAN RRK CHECKER ENGINEER RRK ENGINEER BRA	TECHNOLOGY TEST BED	GEORGE C. MARSHALL SPACE FLIGHT CENTER NATIONAL AERONAUTICS AND SPACE ADMINISTRATION HUNTSVILLE, ALABAMA	DESIGN CODE
NEXT ASSY / USED ON	MATERIAL NOTED HEAT TREATMENT NONE FINAL PROTECTIVE FINISH NOTED	SUBMITTED APPROVED	LOX STORAGE FACILITY BUILDING 4670	DWG SIZE E 90M09265	
APPLICATION		WEIGHT CHECKER / DATE 7-10-89 / CODE EI35		SHEET 13 OF 14	
		SCALE NOTED	UNIT WEIGHT		