NOTICE - WHEN GOVERNMENT DRAWINGS, SPECIFICATIONS, OR OTHER DATA ARE USED FOR ANY PURPOSE OTHER THAN IN CONNECTION WITH A DEFINITELY RELATED GOVERNMENT PROCUREMENT OPERATION, THE UNITED STATES GOVERNMENT THEREBY INCURS NO RESPONSIBILITY NOR ANY OBLIGATION WHATSOEVER; AND THE FACT THAT THE GOVERNMENT MAY HAVE FORMULATED, FURNISHED, OR IN ANY WAY SUPPLIED THE SAID DRAWINGS, SPECIFICATIONS, OR OTHER DATA IS NOT TO BE REGARDED BY IMPLICATION OR OTHERWISE AS IN ANY MANNER LICENSING THE HOLDER OF ANY OTHER PERSON OR CORPORATION, OR CONFERRING ANY RIGHTS OR PERMISSION TO MANUFACTURE, USE, OR SELL ANY PATENTED INVENTION THAT MAY IN ANY WAY BE RELATED THERETO.

PART NO.	NF	REVISIONS			
		ZONE	SYM	DESCRIPTION	DATE	APPROVAL
			-			

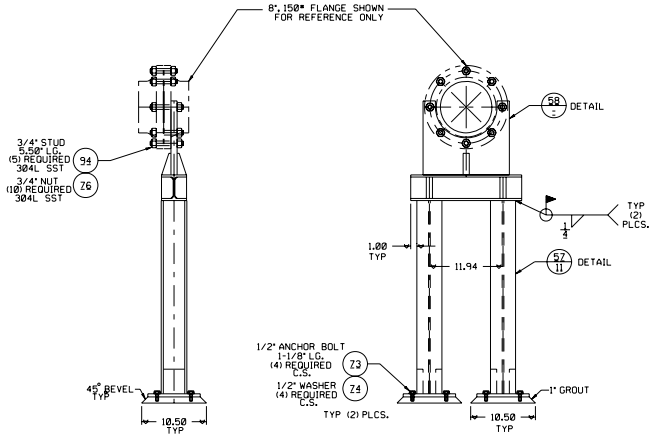

DETAIL 56/3

SCALE: 1:8_____

MAT'L: C.S.&_304L_SSI.....

(1) REQUIRED

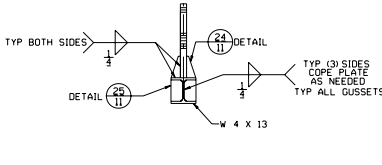

DETAIL 58/-

SCALE: 1:8_____

MAT'L: C.S.....

(1) REQUIRED

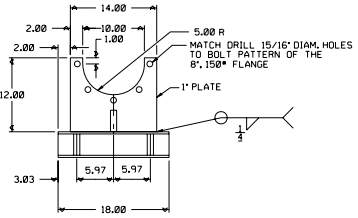

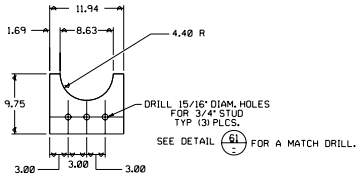

DETAIL 60/-

SCALE: 1:8_____

MAT'L: 304L_SSI.....

(1) REQUIRED

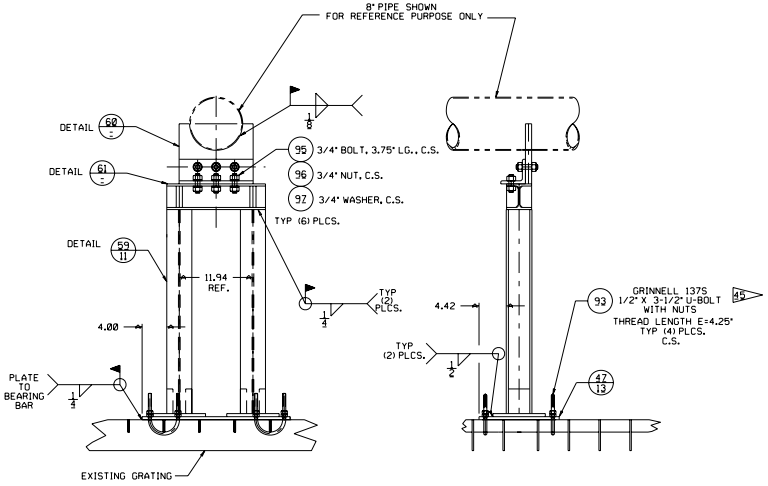

DETAIL 48/3

SCALE: 1:8_____

MAT'L: C.S.&_304L_SSI.....

(1) REQUIRED

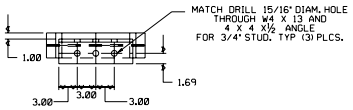

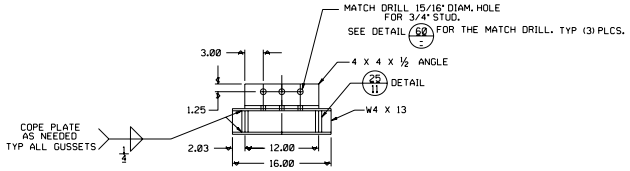

DETAIL 61/-

SCALE: 1:8_____

MAT'L: C.S.....

(1) REQUIRED

90M09265

SEE SHT1

SEE ENGINEERING RECORDS	UNLESS OTHERWISE SPECIFIED: DIMENSIONS ARE IN INCHES; TOLERANCES ON FRACTIONS ±1/32, DECIMALS XX- ±.03, XXX- ±.010, ANGLES ±1/2°	ORIGINAL DATE OF DRAWING 7-31-89	TECHNOLOGY TEST BED	GEORGE C. MARSHALL SPACE FLIGHT CENTER NATIONAL AERONAUTICS AND SPACE ADMINISTRATION MARSHALL, ALABAMA	DESIGN CODE
	MATERIAL NOTED	DRAFTSMAN RRK / CHECKER	LOX STORAGE FACILITY BUILDING 4670		
	HEAT TREATMENT NONE	CHECKER / STRESS			
NEXT ASSY / USED ON	FINAL PROTECTIVE FINISH NOTED	ENGINEER RRK / ENGINEER BRA			
APPLICATION		SUBMITTED			
		APPROVED	WEIGHT CHECKER / DATE 7-10-89 / CODE EI35	DWG SIZE E / 90M09265	
			SCALE NOTED / UNIT WEIGHT	SHEET 14 OF 14	